City of Nogales
Royal Road Water Main Replacement

Department of Public Works
City of Nogales

Water Infrastructure Finance Authority of Arizona
(WIFA)

Bid Number WIW-2022-01

City of Nogales
777 N. Grand Avenue
Nogales AZ 85621
July 2022

Kimley»Horn
Expect More. Experience Better.

WIFA

TABLE OF CONTENTS
CONTRACT DOCUMENTS

CITY OF NOGALES
ROYAL ROAD WATER MAIN REPLACEMENT
BID #WIW-2022-01

INVITATION TO BID 3

INSTRUCTIONS TO BIDDERS 5

BID PROPOSAL FORM 13

SUBCONTRACTORS AND MATERIAL SUPPLIERS LIST 18

BID BOND 19

NOTICE OF AWARD 20

NOTICE OF NON-AWARD 23

CONSTRUCTION AGREEMENT 24

LABOR AND MATERIALS PAYMENT BOND 39

PERFORMANCE BOND 42

NOTICE TO PROCEED 44

PAYMENT APPLICATION FORMS 47

SECTION A - GENERAL CONDITIONS 51

SECTION B - SPECIAL PROVISIONS 82

SECTION C – WIFA COMPLIANCE DOCUMENTS 108

SECTION D – WAGE RATE DECISION 109

SECTION E - ENVIRONMENTAL CONDITIONS 110

SECTION F - DRAWINGS 116

INVITATION TO BID

The City of Nogales has been awarded a Water Infrastructure Finance Authority of Arizona (WIFA) grant for the **Royal Road Water Main Replacement (Bid No. WIW-2022-01).** The City will accept bids from qualified firms or individuals with the appropriate license as registered with the Arizona Registrar of Contractors to perform the following services:

Project Description

The Royal Road Water Main Replacement consists of the installation of of approximately 11,300 linear feet of new 8-inch PVC waterline to replace existing 4-inch diameter asbestos cement (AC) pipe along Royal Road and adjacent streets. Additionally, this project includes the installation of approximately 1,500 linear feet of new 12-inch PVC waterline to replace the existing 10-inch diameter pipe from the Royal Road Storage Tank to Royal Road, along with valves, hydrants, fittings, pavement repair, and other miscellaneous items.

Objective/Scope of Work

The contractor shall furnish all materials, labor, equipment, services, transportation and perform all the work for the City's project known as Royal Road Water Main Replacement for City of Nogales, Arizona as called for in the plans and specifications. The successful proposer will be required to lend all possible assistance in the preparation, investigation and documentation necessary for compliance with all applicable federal Labor Standards/Davis-Bacon and other requirements of the Water Infrastructure Finance Authority of Arizona. The successful proposer should be prepared to comply with all local, state and federal safety and environmental requirements. The project shall be accomplished in accordance with all federal program and state statutory requirements to include 2 CFR 200, Executive Orders and the Arizona Administrative Code.

Bids

All bids must be presented on the prescribed forms included in the contract documents. Failure to complete all of the required forms may result in rejection of the bid. Free digital copies of the complete bid document, specifications, and drawings may be obtained from the **City of Nogales Website** (https://www.nogalesaz.gov/departments/finance/bids).

Bidders are required to register their prospective intent to bid on this project in order to receive notices or addenda related to this invitation to bid. The City will not be responsible for bidders who fail to register their intent. Bidders can register by calling Alma Almada at 520-285-5753 or by email at agalmada@nogalesaz.gov. For correspondence, questions and/or clarifications of the bidding procedure and

clarifications or questions concerning the plans or specs; please email Alejandro Barcenas, Public Works Director, at abarcenas@nogalesaz.gov.

A Mandatory Pre-Bid Conference is scheduled for 9:00 a.m., Arizona Standard Time, Friday, October 28, 2022, at the Nogales Public Works Administration Building, 1450 N. Hohokam Drive, Nogales AZ 85621. Prospective bidders are required to attend. Only those companies signed in on the Pre-Bid sign-in sheet will be permitted to bid.

Sealed Bids will be received at the office of the City Clerk, 777 N. Grand Avenue, Nogales Arizona 85621, until 4:00 p.m., Arizona Standard Time, Tuesday, November 22, 2022, at which time all bids received will be opened and the amounts read aloud. Bids received after that time will not be accepted. All bids shall be identified as **"Sealed Bids** – **Royal Road Water Main Replacement**, **Bid #WIW-2022-01.**

Bidders are hereby notified that federal funds are being used to assist in the construction of this project and, accordingly, Bidders will be required to comply with all applicable federal laws, including, but not limited to the Copeland "Anti-Kickback" Act (18 U.S.C. 874) as supplemented by Department of Labor Regulation (29 C.F.R. Part 3). In addition, all wages must be in compliance with the Davis-Bacon wage rate determination of this project.

The City of Nogales reserves the right to accept the lowest, responsive, responsible bid of any bidder eligible to participate in federally funded projects; to consider alternatives; or reject any or all bids, and to waive irregularities or informalities deemed advantageous to the City.

The City of Nogales is an Affirmative Action/ Equal Opportunity Employer.

BY ORDER OF: Arturo Garino
Mayor, City of Nogales

END

INSTRUCTIONS TO BIDDERS

1. Submit one (1) copy of the bid which shall be sealed and filed at the time and place indicated in the Invitation to Bid. The following additional items shall be completed and/or accompany each Bid Proposal: The entire bid document is to be submitted as the bid. Individual forms are not to be separated from the bid document.
    a. Bid Security (Bond or Certified Check).
    b. A Non-Collusion Affidavit of Prime Bidders form completed and signed
    c. Subcontractors and Materials Suppliers List form completed and signed
2. Upon receipt of "Notice of Award" the successful bidder will deliver the following items:
    a. Performance Bond executed by the bidder payable to The CITY OF NOGALES;
    b. Labor & Material Payment Bond payable to The CITY OF NOGALES;
    c. Certification of Insurance; and
    d. Executed Contracts (four copies).
3. Receipt and Opening of Bids: The CITY OF NOGALES (herein called the "Owner"), invites bids on the forms herein, all blanks on which must be appropriately filled. The entire Bid Document is to be submitted as the Bid, individual forms are not to be separated from this document. Bids will be received by the City of Nogales, Public Works Department, 777 N. Grand Avenue, Nogales AZ 85621 until 4:00 p.m. Arizona Standard Time on the date set forth in the Invitation to Bid, and then publicly opened and read. The envelopes containing the bids must be sealed, addressed to the City of Nogales, Public Works Department, 777 N. Grand Avenue, Nogales AZ 85621 and designated as **"Bid for City of Nogales, Royal Road Water Main Replacement Bid #WIW-2022-01"**.
4. The City of Nogales reserves the right to reject any and all bids and to award the contract to other than the low bidder with good cause. The City further reserves the right to waive any informality or irregularities in the bidding process. Additionally, the bidder recognizes the right of the City to reject a bid if the bidder failed to furnish the data required by the bidding documents or if the bid is in any way incomplete or irregular. Any bid may be withdrawn prior to the above scheduled time for the opening of bids or authorized postponement thereof. Any bid received after the time and date specified shall not be considered.

All bids shall remain firm for a period of thirty (30) calendar days after the date of the bid opening. Bids may not be modified after submittal. Bidders will not be allowed to withdraw submitted bids during the thirty (30) day period.

5. Preparation of Bid: Each bid must be submitted on the prescribed form. All blank spaces for bid prices must be filled in, in ink or typewritten, the license number of the bidder must be filled in, and the bid must be properly executed.

   Each bid must be submitted in a sealed envelope bearing on the outside the name of the bidder, his/her address, and the name of the project for which the bid is submitted. If forwarded by mail, the sealed envelope containing the bid must be enclosed in another envelope addressed as specified in the bid form.

6. Method of Bidding: The Owner invites the following bid: A bid based upon unit prices shown on the bid proposal form for Bid for City of Nogales, Royal Road Water Main Replacement, Bid #WIW-2022-01.

7. Qualification of Bidder: The Owner may make such investigations as deemed necessary to determine the ability of the bidder to perform the work, and the bidder shall furnish to the Owner all such information and data for this purpose as the Owner may request. The Owner reserves the right to reject any bid if the evidence submitted by or investigation of such bidder fails to satisfy the Owner that such bidder is properly qualified to carry out the obligations of the contract and to complete the work contemplated therein. Conditional bids will not be accepted.

8. Bid Security: Each bid must be accompanied by cash, certified check of bidder, or a bid bond prepared on a form of bid bond per current Arizona Revised Statutes duly executed by the bidder as principal and having as surety thereon a surety company approved by the Owner, in the amount of 5% of the base bid. Such cash, checks or bid bonds will be returned to all except the three lowest bidders within three days after the opening of the bids, and the remaining cash, checks or bid bonds will be returned promptly after the Owner and the accepted bidder have executed the contract, or, if no award has been made within 60 days after the date of the opening of bids, upon demand of the bidder at any time thereafter, so long as he/she has not been notified of the acceptance of his/her bid.

9. Bonds: The Contractor may use forms obtained from the bonding company for the Bid Bond, Performance Bond, or Payment Bond that conform to the requirements of ARS, Title 34, or use forms provided herein.

10. Liquidated Damages for Failure to Enter Into Contract: The successful bidder, upon his/her failure or refusal to execute and deliver the contract and bonds required within 10 calendar days after he/she has received notice of the acceptance of

his/her bid, shall forfeit to the Owner, as liquidated damages for such failure or refusal, the security deposited with his/her bid.

11. Time of Completion and Liquidated Damages: Bidder must agree to commence work on or before a date to be specified in a written "Notice to Proceed" by the Owner and to fully complete the project within 180 consecutive calendar days thereafter. Bidder must agree also to pay as liquidated damages, the sum of $1,000 for each consecutive calendar day thereafter as hereinafter provided in the General Conditions. The successful bidder will be required to provide a construction schedule at the pre-construction conference.

12. Conditions of Work: Each bidder must inform him/herself fully of the conditions relating to the construction of the project and the employment of labor thereon. Failure to do so will not relieve a successful bidder of his/her obligation to furnish all material and labor necessary to carry out the provisions of his/her contract. Insofar as possible, in carrying out the work, the Contractor must apply such methods or means as will not cause any interruption of or interference with the work of any other contractor.

13. Addenda and Interpretations: No interpretations of the meaning of the plans, specifications or the bid documents will be made to any bidder orally.

    Any request for additional interpretation shall be in writing and faxed or e-mailed to Alejandro Barcenas, Public Works Director, City of Nogales at abarcenas@nogalesaz.gov, no later than November 8, 2022 (exclusive of weekends and holidays). Any and all additional information, interpretations, or supplemental instructions will be in written form as an addenda to the specifications which, if issued, will be faxed and/or e-mailed to all prospective bidders (at the appropriate fax number or e-mail address furnished by each prospective bidder for this purpose), no later than November 17, 2022 (exclusive of weekends and holidays). Failure of any bidder to receive any such addendum shall not relieve such bidder from any obligation under their bid as submitted. All addenda so issued shall become part of the contract documents and shall be acknowledged on the Bid Proposal form.

14. Security for Faithful Performance: The contractor to whom the contract is awarded will be required to execute the contract and obtain the Performance Bond and Payment Bond within ten (10) calendar days from the date of receipt of the Notice of Award. The Notice of Award shall be accompanied by the necessary contract documents. If the bidder fails to execute the contract, the City may consider the bidder in default, in which case the bid bond accompanying the proposal shall become the property of the City. The surety on such bonds shall be a duly authorized surety company satisfactory to the Owner.

15. Power of Attorney: Attorneys-in-fact who sign bid bonds or contract bonds must file with each bond a certified and effectively dated copy of their power of attorney.

16. Insurance: The contractor shall purchase and maintain during the contract time insurance as listed in the contract, including Protective Bodily Injury, Personal Property and Automobile Bodily Injury and Property Damage. The contractor will be required to provide evidence of such insurance prior to issuance of the Notice to Proceed in a form acceptable to the The City of Nogales.

    The Certificate of Insurance shall name The City of Nogales as additional insured. As required by law, the Certificate of Insurance shall be provided by an insurance carrier(s) authorized to do business in the State of Arizona or countersigned by an agent of the carrier authorized to do business in the State of Arizona.

    Additionally, the contractor will be required to purchase and maintain Worker's Compensation Insurance, including occupational disease provisions, for all employees at the site of the project. In case any work is sublet, the contractor shall require such sub-contractor similarly to provide Workers' Compensation Insurance, including occupational disease provisions, for all the latter's employees unless such employees are covered by the protection afforded by the Contractor.

17. Laws and Regulations: The bidder’s attention is directed to the fact that all applicable state laws, municipal ordinances, and the rules and regulations of all authorities having jurisdiction over construction of the project shall apply to the contract throughout, and they will be deemed to be included in the contract the same as through herein written out in full.

18. Method of Award – Lowest Qualified Bidder: The City of Nogales believes that selecting an experienced contractor is essential for the successful and timely completion of this project. Therefore, the selected contractor or his submitted subcontractor should be able to demonstrate successful completion of at least five similar projects within the past ten years. The City reserves the right to reject a bid that does not demonstrate this level of experience. The contractor shall provide a list of these similar projects with the bid response documents. This contract will be awarded to the lowest responsive/responsible bidder eligible to participate in federally funded projects, if the lowest bid does not exceed the amount of funds available by the Owner to finance the contract. The lowest bid shall be considered by the Owner to be the lowest of base bid plus or minus any selected alternates. If such lowest bid exceeds such amount, the Owner may reject all bids.

19. Protest Procedure: Bid protests shall be submitted in writing to: Alejandro Barcenas, Public Works Director, 777 N. Grand Avenue, Nogales AZ 85621 within seventy-two (72) hours of bid award notification. Protests must contain at a

minimum the name, address and telephone number of the protester, the signature of the protester or its representative and evidence of authority to sign; a detailed statement of the legal and factual grounds of the protest including copies of relevant data; and the form of relief requested. Within three (3) business days of receipt, and after consultation with legal counsel, WIFA, or others, the City will respond to the protest. The City of Nogales reserves the right to reject any or all bids; to waive irregularities of information in any bid; and/or to take any steps determined prudent in order to resolve the protest.

20. Obligation of Bidder: At the time of the opening of bids each bidder will be presumed to have inspected the site and to have read and to be thoroughly familiar with the plans and contract documents (including all addenda).

    If no site investigation is performed, the bidder is responsible for all site conditions that should have been discovered had a reasonable site investigation been performed. The submission of a bid will be considered conclusive evidence that the bidder is satisfied with the conditions to be encountered in performing the work and the requirements of the proposed contract.

    Bidders must satisfy themselves of the accuracy of the estimated quantities in the bid schedule by examination of the site and a review of the drawings and specifications including addenda. After bids have been submitted, the bidder shall not assert that there was a misunderstanding concerning the quantities of work to be done or the condition of the site that could have been reasonably discovered as the result of examination, investigation or review of the site and the contiguous area.

21. Safety Standards and Accident Prevention: With respect to all work performed under this contract, the contractor shall:

    a. Comply with the safety standards provisions of applicable laws, building and construction codes and the “Manual of Accident Prevention in Construction”, published by the Associated General Contractors of America, the requirements of the Occupational Safety and Health Act of 1970 (Public Law 91-956), and the requirements of Title 29 of the Code of Federal Regulations, Section 1518 as published in the “Federal Register”, Volume 36, No. 75, Saturday, April 17, 1971.

    b. Exercise every precaution at all times for the prevention of accidents and the protection of persons (including employees) and property.

    c. Maintain at his/her office or other well-known place at the job site all articles necessary for giving first aid to the injured and shall make standing arrangements for the immediate removal to a hospital or a doctor’s care of persons (including employees), who may be injured on the job site. In no case

shall employees be permitted to work at a job site before the employer has made a standing arrangement for transportation of injured persons to a hospital or a doctor's care.

22. Federal Funds: This project is being financed in whole or in part by the Water Infrastructure Finance Authority of Arizona through the Clean Water or Drinking Water Revolving Fund. The Owner is required to comply with the following federal and state laws, rules and regulations, more specially outlined in Section C, and must ensure that the contractors also comply with these regulations, laws and rules:

    a. Title VI of the Civil Rights Act of 1964

    b. The Rehabilitation Act of 1973

    c. The Age Discrimination Act of 1975

    d. Section 13 of the Federal Water Pollution Control Act

    e. Equal Employment Opportunity

    f. Promoting the use of Small, Minority, and Women-owned Businesses

    g. Small Businesses Reauthorization & Amendment Act of 1988

    h. Department of Veterans Affairs and Housing and Urban Development, and Independent Agencies Appropriations Act, 1993

    i. Title X of the Clean Air Acts Amendments of 1990

    j. Participation by Disadvantaged Business Enterprises in Procurement under Environmental Protection Agency (EPA) Financial Assistance Agreements

    k. Debarment and Suspension

    l. E-Verify

    m. Use of American Iron and Steel (AIS)

    n. Federal Davis-Bacon prevailing wages

    o. Prohibition on Certain Telecommunication and Video Surveillance Services or Equipment

23. Subcontractors and Material Suppliers: The enclosed "Subcontractors and Material Suppliers List" is to be completed by the bidder and included in the bid. All subcontractors to be utilized and a specific description of the scope of the subcontract must appear on the subscribed form. Deviations from the subcontracts as provided on this form, except as may be modified prior to the scheduled closing time for receipt of bids, will not be allowed.

BID PROPOSAL FORM

PROJECT IDENTIFICATION

City of Nogales
Royal Road Water Main Replacement

THIS BID IS SUBMITTED TO:

City of Nogales
777 N. Grand Avenue
Nogales, Arizona 85621
Attn: Alejandro Barcenas, Public Works Director

1.01 The undersigned Bidder proposes and agrees, if this Bid is accepted, to enter into an Agreement with OWNER in the form included in the Bidding Documents to perform all Work as specified or indicated in the Bidding Documents for the prices and with the times indicated in this Bid and in accordance with the other terms and conditions of the Bidding Documents.

2.01 Bidder accepts all of the terms and conditions of the Advertisement or Invitation to Bid and Instructions to Bidders, including without limitation those dealing with the disposition of Bid security. The Bid will remain subject to acceptance for 30 days after the Bid opening, or for such longer period of time that Bidder may agree to in writing upon request of OWNER.

3.01 In submitting this Bid, Bidder represents, as set forth in the Agreement, that:

1. Bidder has examined and carefully studied the Bidding Documents, the other related data identified in the Bidding Documents, and the following Addenda, receipt of all which is hereby acknowledged.

Addendum No.	Addendum Date
_____	_____
_____	_____

2. Bidder has visited the Site and become familiar with and is satisfied as to the general, local and Site conditions that may affect cost, progress, and performance of the Work.

3. Bidder is familiar with and is satisfied as to all federal, state and local Laws and Regulations that may affect cost, progress and performance of the Work.

4. Bidder has obtained and carefully studied (or assumes responsibility for having done so) all additional or supplementary examinations, investigations, explorations, tests, studies and data concerning conditions (surface, subsurface and underground facilities) at or contiguous to the Site that may affect cost, progress and performance of the Work or that relate to any aspect of the means, methods, techniques, sequences, and procedures of construction to be employed by Bidder, including applying the specific means, methods, techniques, sequences, and procedures of construction expressly required by the Bidding Documents to be employed by Bidder, and safety precautions and programs incident thereto.

5. Bidder does not consider that any further examinations, investigations, explorations, tests, studies, or data are necessary for the determination of this Bid for performance of the Work at the price(s) bid and within the times and in accordance with the other terms and conditions of the Bidding Documents.

6. Bidder is aware of the general nature of work to be performed by OWNER and others at the Site that relates to the Work as indicated in the Bidding Documents.

7. Bidder has correlated the information known to Bidder, information and observations obtained from visits to the Site, reports and drawings identified in the Bidding Documents, and all additional examinations, investigations, explorations, tests, studies, and data with the Bidding Documents.

8. Bidder has given ENGINEER written notice of all conflicts, errors, ambiguities, or discrepancies that Bidder has discovered in the Bidding Documents, and the written resolution thereof by ENGINEER is acceptable to Bidder.

9. The Bidding documents are generally sufficient to indicate and convey understanding of all terms and conditions for the performance of the Work for which this Bid is submitted.

4.01 Bidder further represents that this Bid is genuine and not made in the interest of or on behalf of any undisclosed individual or entity and is not submitted in conformity with any agreement or rules of any group, association, organization or corporation; Bidder has not directly or indirectly induced or solicited any other Bidder to submit a false or sham Bid; Bidder has not solicited or induced any individual or entity to refrain from bidding; and Bidder has not sought by collusion to obtain for itself any disadvantage over any other Bidder or over OWNER.

5.01 Bidder will complete the Work in accordance with the Contract Documents for the following price(s):

ITEM NO.	ITEM DESCRIPTION	UNIT	QUANTITY	UNIT COST	TOTAL
1	Mobilization	LS	1	$	$
2	Construction Surveying and Layout	LS	1	$	$
3	Traffic Control	LS	1	$	$
4	Potholing	LS	1	$	$
5	Remove of Structures and Obstructions	LS	1	$	$
6	Pavement Replacement for New Water Mains	SY	13,790	$	$
7	Pipe, Ductile Iron, (DI), 6" (CL 350)	LF	181	$	$
8	Pipe, Ductile Iron, (DI), 8" (CL 350)	LF	43	$	$
9	Pipe, Ductile Iron, (DI), 12" (CL 350)	LF	310	$	$
10	Pipe, Polyvinyl Chloride (PVC), 6" DR 14 (CL 305)	LF	212	$	$
11	Pipe, Polyvinyl Chloride (PVC), 8" DR 14 (CL 305)	LF	10,833	$	$
12	Pipe, Polyvinyl Chloride (PVC), 12" DR 14 (CL 305)	LF	1,532	$	$
13	Service Renewal (Meter not Relocated), 1"	LF	3,944	$	$
14	Gate Valve, 6", Box & Cover	EA	14	$	$
15	Gate Valve, 8", Box & Cover	EA	26	$	$
16	Gate Valve, 12", Box & Cover	EA	2	$	$
17	Flanged Gate Valve W/ Wheel, 6"	EA	1	$	$
18	Flanged Gate Valve W/ Wheel, 10"	EA	1	$	$
19	Eccentric Reducer 8"X4"	EA	1	$	$
20	Eccentric Reducer 8"X6"	EA	1	$	$
21	Eccentric Reducer 12"X10"	EA	1	$	$
22	Combination Air/Vacuum Release Valve (ARV), 1"	EA	5	$	$
23	Drain Valve Assembly (DVA)	EA	7	$	$
24	Fire Hydrant	EA	10	$	$
25	Remove and Salvage Existing Fire Hydrant	EA	10	$	$
26	Connections, 4"	EA	1	$	$
27	Connections, 6"	EA	2	$	$
28	Connections, 10"	EA	3	$	$
29	Remove and Salvage Existing Fire Hydrant	EA	10	$	$
30	Water Pipe, Abandon in Place	LF	12,973	$	$
				TOTAL BID	$

It is the CONTRACTOR's responsibility to verify all quantities required for his Bid. If the Owner decides to decrease or increase the scope of the project, the unit prices indicated on the Bid Schedule will be used to adjust the price. Therefore, it is the CONTRACTOR's responsibility to ensure that unit prices include all aspects of the work including, but not limited to, fees, permits, labor, materials, equipment, and restoration.

Those bid items specifically identified as unit price items will be paid on a basis as determined by the OWNER and CONTRACTOR during construction.

6.01 Bidder agrees that the Work will be completed and ready for final payment in accordance with Article 29 of the General Conditions within 180 calendar days after Notice to Proceed.

6.02 Bidder accepts the provisions of the Agreement as to liquidated damages.

7.01 The following documents are attached and made a condition of this Bid:

1. Required Bid security in the form of Bid Bond, Certified Check or Cashier's Check.
2. List of Similar Projects Completed
3. Subcontractors and Materials Suppliers List

The Undersigned is the holder of Arizona State General Contractor's License No._____ _____ and Classification _____

Firm Name: _____

Typed Name of Signatory: _____

Authorized Signature _____

Business Address Complete _____

_____

Phone No:_____Fax No: _____

SUBCONTRACTORS AND MATERIAL SUPPLIERS LIST

The Contractor shall list below all qualified subcontractors and material suppliers for this project.

Specialty	Subcontractor/Material Supplier Name	License #

BID BOND

THE CITY OF NOGALES
ROYAL ROAD WATER MAIN REPLACEMENT
(Penalty of this bond must not be less than 5% of the base bid amount plus alternate)

KNOW ALL MEN BY THESE PRESENTS,

That we, the undersigned, _____ as Contractor, hereinafter called the Principal, and a corporation duly organized and existing under and by virtue of the laws of the State of Arizona and authorized to do business in the State of Arizona, as Surety, hereinafter called the Surety, are held and firmly bound unto the **CITY OF NOGALES, Arizona** as Owner in the penal sum of _____ dollars ($_____) for the payment of which sum well and truly to be made we bind ourselves, our heirs, executors, administrators, successors and assigns, jointly and severally, firmly by these presents.

The condition of this obligation is such, that whereas the Principal has submitted to the **CITY OF NOGALES**, the accompanying Bid Proposal, attached hereto and hereby made as part hereof to enter into a contract in writing for **"Sealed Bids – Royal Road Water Main Replacement Bid# WIW-2022-01"** and is hereinafter referred to as the Bid.

NOW THEREFORE, if the Owner shall accept the Bid of the Principal and the Principal shall enter into a Contract with the Owner in accordance with the terms of such Bid, and give such bond or bonds as may be specified in the Bidding or Contract Document with good and sufficient Surety for the faithful performance of such Contract and for the prompt payment of labor and material furnished in the prosecution thereof, or in the event of the failure of the Principal to enter such Contract and give such bond or bonds if the Principal shall pay to the Owner the difference not to exceed the penalty hereof between the amount specified in said Bid and such larger amount for which the Owner may in good faith contract with another party to perform the work covered by said Bid, then the obligation shall be null and void, otherwise to remain in full force and effect.

SIGNED AND SEALED THIS ___ day of _____, 2022.

Principal _____

By _____

Attest: Surety _____

Title _____

Attest By _____

Title _____

NOTICE OF AWARD - CONSTRUCTION

Date

Address

RE: NOTICE OF AWARD FOR CONSTRUCTION SERVICES FOR THE CITY OF NOGALES ROYAL ROAD WATER MAIN REPLACMENT

Dear _____;

You are hereby notified that the City of Nogales has awarded you the construction contract for the above cited Project for a total amount of $_____

In order to comply with WIFA program requirements, time must be allotted for all participating firms to comment on or protest the City's decision. In the meantime, within 10 days of receiving this Notice of Award please:

a. Return to the City of Nogales, hereafter referred to as the OWNER, the enclosed four (4) Construction Agreements. All appropriate documents must be signed by the principals, and corporate seals affixed as appropriate.

b. Deliver to the OWNER one (1) Performance Bond in the amount of the award.

c. Deliver to the OWNER one (1) Labor and Material Payment Bond in the amount of the award.

d. Deliver to the OWNER one (1) Certificate of Insurance. This must meet the minimum requirements in the contract, to include Worker's Compensation. Please ensure the OWNER is designated as additional insured.

Failure to comply with these conditions within the time specified will entitle the OWNER to consider your proposal abandoned and annul this Notice of Award.

Within ten (10) days after you comply with the above-referenced conditions, the OWNER will return to you one (1) fully executed Contract.

Enclosed is a copy of the SF1444 form, please confirm that **ALL** classifications required to complete this project are included in the Wage Rate Determination. If this project does require additional classifications, you must submit this form to **the Department of Public Works within 10 days of receipt of this letter.**

A Pre-Construction Conference will be held on MM DD, YYYY from XX:XX a.m. to X:XX p.m. Arizona Standard Time.

If you require any other information, please contact Ray Montoya, P.E., at Kimley-Horn and Associates, Inc., at (602) 678-3454 (Ray.Montoya@Kimley-Horn.com).

The City of Nogales
(OWNER)

Alejandro Barcenas, Public Works Director

Enclosures: Contracts (4)

NOTICE OF NON-AWARD – CONSTRUCTION SERVICES

Date

Contractor/Address

Dear _____:

RE: NOTICE OF NON-AWARD FOR CONSTRUCTION SERVICES FOR THE CITY OF NOGALES ROYAL ROAD WATER MAIN REPLACEMENT

You are hereby notified that your bid for the above-mentioned WIFA project was considered. On behalf of the City of Nogales, I regret to inform you that you have not been awarded the contract. However, we very much appreciate your participation. You have the right to protest the decision made by the City. If your firm wishes to protest either informally or formally, the deadline is within seventy-two (72) hours of bid award notification. All comments should be addressed to: John Kissinger, Deputy City Manager, City of Nogales, 777 N. Grand Avenue, Nogales AZ 85621. Protests must contain at a minimum the name, address and telephone number of the protester, the signature of the protester or authorized representative, a detailed statement of legal and factual grounds of the protest including copies of relevant data, and the form of relief requested. Within three (3) business days of receipt, and after consultation with legal counsel, or others, the City will respond to the protest.

The City of Nogales again thanks you for the submittal of your bid. **Your Bid Bond is enclosed.**

Sincerely,

Alejandro Barcenas, Public Works Director

Enclosure

CONSTRUCTION AGREEMENT

THIS AGREEMENT, entered into this _____, 2022, by and between the City of Nogales, Santa Cruz County, State of Arizona (hereinafter called the "CITY") by Alejandro Barcenas, Public Works Director of the City of Nogales, hereunto duly authorized, and _____ (hereinafter called the "CONTRACTOR") acting herein by _____, hereunto authorized.

WITNESSETH THAT:

The CITY desires to engage the CONTRACTOR to render construction services for the Royal Road Water Main Replacement Bid # WIW-2022-01.

NOW, THEREFORE the parties do mutually agree as follows:

1. Work

CONTRACTOR shall complete all work as specified or indicated in the contract documents. The work is generally described as follows:

The Royal Road Water Main Replacement consists of the installation of of approximately 11,300 linear feet of new 8-inch PVC waterline to replace existing 4-inch diameter asbestos cement (AC) pipe along Royal Road and adjacent streets. Additionally, this project includes the installation of approximately 1,500 linear feet of new 12-inch PVC waterline to replace the existing 10-inch diameter pipe from the Royal Road Storage Tank to Royal Road, along with valves, hydrants, fittings, pavement repair, and other miscellaneous items.

2. Contract Times

The work will be completed and ready for final payment within one hundred and twenty (180) calendar days of the date in the Notice to Proceed.

3. Liquidated Damages

CITY and CONTRACTOR recognize that time is of the essence of this Agreement and that the CITY will suffer financial loss if the work is not completed within the time specified. They also recognize the delays, expense and difficulties involved in proving the actual loss suffered by the CITY if the work is not completed on time. Accordingly, instead of requiring any such proof, the CITY and CONTRACTOR agree that as liquidated damages for delay (but not as a penalty) CONTRACTOR shall pay the CITY $1,00.00 for each day that expires after the time specified for final completion until the work is complete and ready for final payment.

4. Compensation and Method of Payment

The amount of compensation and reimbursement to be paid hereunder is: _____ ($_____), the total of the base bid.

Applications for progress payments, including amounts to be retained, shall be processed in accordance with A.R.S. § 34-221(C) and the relevant provisions of the General Conditions.

5. Miscellaneous Provisions

a. This Agreement shall be construed under and in accordance with the laws of the State of Arizona and all obligations of the parties created hereunder are performable in Santa Cruz County, Arizona. Venue and jurisdiction for any conflict resolution proceding, formal or informal, shall occur in Santa Cruz County, Arizona.

b. This Agreement shall be binding upon and ensure to the benefit of the parties hereto and their respective heirs, executors, administrators, legal representatives, successors and assigns where permitted by this Agreement.

c. In any case one (1) or more of the provisions contained in this Agreement shall, for any reason, be held to be invalid, illegal or unenforceable said holding shall not affect any other provision thereof and this Agreement shall be construed as if such invalid, illegal or unenforceable provision had never been contained herein.

d. If any action at law or in equity is necessary to enforce or interpret the terms of this Agreement, the prevailing party shall be entitled to reasonable attorney's fees, expert witness fees, costs and necessary disbursements in addition to any other relief to which such party may be entitled.

e. This Agreement may be amended only by mutual agreement of the parties hereto in writing to be attached to and incorporated into this Agreement.

6. Insurance

The CONTRACTOR shall purchase and maintain the herein stipulated minimum insurance with companies duly licensed, possessing a current A.M. Best, Inc. Rate of A10, or approved by CITY in its sole discretion and licensed to do business in the State of Arizona with policies and forms satisfactory to the CITY.

All insurance required herein shall be maintained in full force and effect until all work or service required to be performed under the terms of the Contract is satisfactorily completed and formally accepted; failure to do so may, at the sole discretion of the CITY, constitute a material breach of this Contract.

The CONTRACTOR'S insurance shall be primary insurance with respect to the CITY**,** and any insurance or self-insurance maintained by the CITY shall not contribute to it.

Any failure to comply with the claim reporting provisions of the insurance policies or any breach of an insurance policy warranty shall not affect coverage afforded under the insurance policies to protect the CITY.

The insurance policies, except Workers' Compensation, shall contain a waiver of transfer rights of recovery (subrogation) against the CITY, its agents, officers, officials and employees for any claims arising out of the CONTRACTOR's acts, errors, mistakes, omissions, work or service.

The insurance policies may provide coverage which contains deductible or self-insured retentions. Such deductible and/or self-insured retentions shall not be applicable with respect to the coverage provided to the CITY under such policies. The CONTRACTOR shall be solely responsible for the deductible and/or insured retention and the CITY, at its option, may require the CONTRACTOR to secure payment of such deductibles or self-insured retentions by a Surety Bond or an irrevocable and unconditional letter of credit.

The CITY reserves the right to request and to receive, within ten (10) working days, certified copies of any or all of the herein required insurance policies and/or endorsements. The CITY shall not be obligated, however, to review same or to advise CONTRACTOR of any deficiencies in such policies and endorsements, and such receipt shall not relieve CONTRACTOR from, or be deemed a waiver of, the CITY's rights to insist on strict fulfillment of CONTRACTOR'S obligations under this Contract.

The insurance policies, except Workers' Compensation and Professional Liability, required by this Contract, shall name the CITY OF NOGALES, it agents, officers, officials and employees as Additional Insured.

REQUIRED COVERAGE

Commercial General Liability

CONTRACTOR shall maintain Commercial General Liability insurance with an unimpaired limit of not **less than $2,000,000.00 for each occurrence with a $2,000,000.00 Products/Completed Operations Aggregate** and a **$2,000,000.00 General Aggregate Limit**. The policy shall include coverage for bodily injury, broad form property damage, personal injury, products and completed operations and blanket contractual coverage including, but not limited to, the liability assumed under the indemnification provisions of this Contract which coverage will be at least as broad as Insurance Service Office, Inc. Policy Form CG 0001 or any replacements thereof. The coverage shall not exclude X,C,U.

Such policy shall contain a severability of interest provision, and shall not contain a sunset provision or commutation clause, or any provision which would serve to limit third party action over claims.

The Commercial General Liability additional insured endorsement shall be at least as broad as the Insurance Service Office, Inc., Additional Insured, Form B, CG 20101185, and shall include coverage for CONTRACTOR's operations and products and completed operations.

Automobile Liability

CONTRACTOR shall maintain Commercial/Business Automobile Liability insurance with a combined single limit for bodily injury and property damage of **not less than $2,000,000.00 each occurrence** with respect to the CONTRACTOR's any owned, hired, and non-owned vehicles assigned to or used in performance of the CONTRACTOR's work. Coverage will be at least as broad as coverage code 1, "any auto", (Insurance Service Office, Inc. Policy Form CA 0001, or any replacements thereof). Such insurance shall include coverage for loading and off-loading hazards. If hazardous substances, materials or wastes are to be transported, MCS 90 endorsement shall be included and **$5,000,000.00 per accident limits for bodily injury and property damage** shall apply.

Workers' Compensation

The CONTRACTOR shall carry Workers' Compensation insurance to cover obligations imposed by federal and state statutes having jurisdiction of CONTRACTOR's employees engaged in the performance of the work or services; and, Employer's Liability insurance of **not less than the statutory limits.**

In case any work is sub-contracted, the CONTRACTOR will require the Sub-Contractor to provide Workers' Compensation and Employer's Liability to at least the same extent as required of the CONTRACTOR.

Certificates of Insurance

Prior to commencing work or services under this Contract**,** CONTRACTOR shall furnish the CITY with Certificates of Insurance, or formal endorsements as required by the Contract, issued by CONTRACTOR's insurer(s), as evidence that policies providing the required coverages, conditions and limits required by the Contract are in full force and effect.

In the event any insurance policy(ies) required by this Contract, is(are) written on a "claims made" basis, coverage shall extend for two years past completion and acceptance of the CONTRACTOR's work or services and as evidenced by annual Certificates of Insurance.

If a policy does expire during the life of the Contract, a renewal certificate must be sent to the CITY fifteen (15) days prior to the expiration date.

Cancellation and Expiration Notice

Insurance required herein shall not expire, be cancelled, or materially changed without thirty (30) days prior written notice to the CITY.

7. Contract Documents

The contract documents which comprise the entire agreement between the CITY and the CONTRACTOR concerning the work consist of the following, with documents listed first taking precedence over subsequent documents in the event there is any inconsistency of any term:

This Contract and Exhibit A, Terms and Conditions
Specifications incorporated in the bidding documents
General Conditions
Bidding documents including addenda acknowledged in CONTRACTOR bid
Invitation to Bid
Instructions to Bidders
Bid Proposal Form
Bid Bond
Performance Bond
Labor & Material Payment Bond
List of Sub-Contractors
Notice to Proceed
WIFA of Arizona Contract Packet for Governmental Borrowers
Wage Rate Determinations: Wage Rate Determination General Decision Numbers: AZ20220036 (6/10/2022)

8. Terms and Conditions

This Agreement is subject to the provisions entitled "Terms and Conditions" attached hereto and incorporated by reference herein as Exhibit A. This Addendum shall be interpreted as if Exhibit A were printed in full herein.

9. Safety

The safety requirements of the Occupational Safety and Health Act (29 U.S.C. Sections 651-678) as promulgated by the Federal government, and as implemented by the State of Arizona, apply to all work performed under this Contract. The Contractor will be solely responsible for implementing and enforcing the safety requirements of this Act at all times.

10. Retention of Records

The Contractor shall retain all work materials and records relating to the performance of the Scope of Work of the Contract for a period of not less than three (3) years after the final payment is made under the Contract.

11. Independent Contractor

It is clearly understood that CONTRACTOR will act in its individual capacity and not as an agent, employee, partner, joint venture, or associate of the CITY. No employee or agent of CONTRACTOR or CITY shall be deemed or construed to be the employee or agent of the other party for any purpose whatsoever.

12. Certification That Contractor Not Engaged In Boycott Of Israel

Pursuant to A.R.S. § 35-393.01, the Contractor certifies that it is not currently engaged in, and for the duration of this Agreement will not engage in, the boycott of any goods or services from the state of Israel.

IN WITNESSETH HEREOF, the parties have hereunto set their hands and seals.

Approved as to Form:

The City of Nogales

_____

Edward Dickie, City Manager

_____

Jose L. Machado, City Attorney

ATTEST:

_____

Leticia Robinson, Nogales City Clerk

CONTRACTOR:

_____

By: _____

Its: _____

(ATTACHED EXHIBIT "A" also to be SIGNED)

EXHIBIT A: TERMS AND CONDITIONS

1. Termination of Contract

a. If, for any reason, the CONTRACTOR shall fail to fulfill in a timely and proper manner his/her obligations under this contract or if the CONTRACTOR shall violate any of the covenants, agreements or stipulations of this contract, the CITY shall thereupon have the right to terminate the contract by giving written notice to the CONTRACTOR of such termination and specifying the effective date thereof. In such event, all finished or unfinished site or structural improvements, as well as all materials or equipment acquired or stored by the CONTRACTOR under this contract shall, at the option of the CITY, become CITY'S property and the CONTRACTOR shall be entitled to receive just and equitable compensation for any work satisfactorily completed hereunder.

   Notwithstanding the above, the CONTRACTOR shall not be relieved of liability to the CITY for damages sustained by the CITY by virtue of any breach of the contract by the CONTRACTOR and the CITY may withhold any payments to the CONTRACTOR for the purpose of set-off until such time as the exact amount of damages due the CITY from the CONTRACTOR is determined.

b. The CITY may terminate this contract at any time by giving at least ten (10) days written notice to the CONTRACTOR. If the contract is terminated by the CITY as provided herein, the CONTRACTOR will be paid as provided in this Addendum for the time expended and expenses incurred up to the termination date. If this contract is terminated due to the fault of the CONTRACTOR, Paragraph 1.a hereof relative to termination shall apply.

c. This contract may be terminated per A.R.S. §38-511, Conflict of Interest.

2. Sanction, Penalties and Debarment

A breach of the Contract provisions concerning violations of federal labor standards may be grounds for termination of the Contract and result in sanctions, penalties including liquidated damages and/or debarment of the CONTRACTOR.

3. Changes

The CITY may request changes in the scope of the services of the CONTRACTOR to be performed hereunder. Such changes, including any increase or decrease in the amount of the CONTRACTOR's compensation, which are mutually agreed upon by and between the CITY and the CONTRACTOR, shall be incorporated in written amendments (Change Orders) to this contract.

4. **Personnel**

   a. The CONTRACTOR represents that he/she has, or will secure at his own expense, all personnel required in performing the services under this contract. Such personnel shall not be employees of or have any contractual relationship with the CITY.

   b. All of the services required hereunder will be performed by the CONTRACTOR or under his/her supervision and all personnel engaged in the work shall be fully qualified, authorized and permitted for such work under state and local law to perform such services.

   c. None of the work or services covered by this Contract shall be sub-contracted without the prior written approval of the CITY. Any work or services sub-contracted hereunder shall be specified by written contract or agreement and shall be subject to each provision of this Contract.

5. **Assignability**

   The CONTRACTOR shall not assign any interest on this Contract and shall not transfer any interest in the same, whether by assignment or novation, without the prior written consent of the CITY thereto: provided, however, that claims for money by the CONTRACTOR from the CITY under this Contract may be assigned to a bank, trust company or other financial institution without such approval. Written notice of any such assignment or transfer shall be furnished promptly to the CITY.

6. **Reports and Information**

   The CONTRACTOR, at such times and in such forms as the CITY may require, shall furnish the CITY such periodic reports as it may request pertaining to the work or services undertaken pursuant to this Contract, the costs and obligations incurred or to be incurred in connection therewith and any other matters covered by this Contract.

7. **Records Maintenance and Retention**

   The CONTRACTOR shall maintain accounts and records including personnel, property and financial records, adequate to identify and account for all costs pertaining to the Contract and such other records as may be deemed necessary by the CITY to assure proper accounting for all project funds, both federal and non-federal shares. These records will be retained for at least three (3) years following the grant contract closeout unless permission to destroy them is granted in writing by the CITY.

8. **Findings Confidential**

   All of the reports, information, data, etc., prepared or assembled by the CONTRACTOR under this Contract are confidential and the CONTRACTOR agrees that they shall not

be made available to any individual or organization without the prior written approval of the CITY.

9. Copyright

No report, plan, drawing or other documents produced in whole or in part under this Contract shall be the subject of an application for copyright by or on behalf of the CONTRACTOR.

10. Compliance with Local Laws

The CONTRACTOR shall comply with all applicable laws, ordinances and codes of the state and local governments and the CONTRACTOR shall save the CITY harmless with respect to any damages arising from any tort done by the CONTRACTOR or representatives in performing any of the work embraced by this Contract.

11. Water Infrastructure Finance Authority of Arizona

This project is being financed in whole or in part by the Water Infrastructure Finance Authority of Arizona through the Clean Water or Drinking Water Revolving Fund. The loan recipient is required to comply with the following federal and state laws, rules and regulations and must ensure that their contractor(s) also comply(ies) with these regulations, laws and rules

a. (i) Title VI of the Civil Rights Act of 1964 (Pub. L. 88-352, 42 U.S.C. Sec. 2000d), (ii) the Rehabilitation Act of 1973 (Pub. L. 93-1123, 87 Stat. 355, 29 U.S.C. Sec. 794), (iii) the Age Discrimination Act of 1975 (Pub. L. 94-135 Sec. 303, 89 Stat. 713, 728, 42 U.S.C. Sec. 6102), (iv) Section 13 of the Federal Water Pollution Control Act (Pub. L. 92-500, 33 U.S.C. Sec. 1251), and subsequent regulations, ensures access to facilities or programs regardless of race, color, national origin, sex, age or handicap.

b. Equal Employment Opportunity (Executive Order 11246, as amended by Executive Orders 11375 and 12086 and subsequent regulations).

   (i) The contractor will not discriminate against any employee or applicant for employment because of race, color, religion, sex or national origin. The contractor will take affirmative action to ensure that applicants are employed, and that employees are treated during employment, without regard to their race, color, religion, sex, or national origin. Such action shall include, but not be limited to the following: employment, upgrading, demotion, or transfer; recruitment or recruitment advertising; layoff or termination; rates of pay or other forms of compensation; and selection for training, including apprenticeship. The contractor agrees to post in conspicuous places, available to employees and applicants for employment, notices to be provided by the contracting officer setting forth the provisions of this nondiscrimination clause.

(ii) The contractor will, in all solicitations or advertisements for employees placed by or on behalf of the contractor, state that all qualified applicants will receive consideration for employment without regard to race, color, religion, sex, or national origin.

(iii) The contractor will send to each labor union or representative of workers with which he has a collective bargaining agreement or other contract or understanding, a notice, to be provided by the agency contracting officer, advising the labor union or worker's representative of the contractor's commitments under Section 202 of Executive Order No. 11246 of September 24, 1965, and shall post copies of the notice in conspicuous places available to employees and applicants for employment.

(iv) The contractor will comply with all provisions of Executive Order No. 11246 of Sept.24, 1965, and all of the rules, regulations, and relevant orders of the Secretary of Labor.

(v) The contractor will furnish all information and reports required by Executive Order No. 11246 of Sept. 24, 1965, and by the rules, regulations and orders of the Secretary ofLabor, or pursuant thereto, and will permit access to his books, records, and accounts by the contracting agency and the Secretary of Labor for purposes of investigation to ascertain compliance with such rules, regulations, and orders.

(vi) In the event of the contractor's noncompliance with the nondiscrimination clauses of this contract or with any of such rules, regulations, or orders, this contract may be cancelled, terminated or suspended in whole or in part and the contractor may be declared ineligible for further Government contracts in accordance with procedures authorized in Executive Order No. 11246 of Sept. 24, 1965, and such other sanctions may be imposed and remedies invoked as provided in Executive Order No. 11246 of Sept. 24, 1965, or by rule, regulation, or order of the Secretary of Labor, or as otherwise provided by law.

(vii) The contractor will include the provisions of paragraphs (i) through (vi) in every subcontract or purchase order unless exempted by rules, regulations, or orders of the Secretary of Labor issued pursuant to Section 204 of Executive Order No. 11246 of Sept.24, 1965, so that such provisions will be binding upon each subcontractor or vendor. The contractor will take such action with respect to any subcontract or purchase order as maybe directed by the Secretary of Labor as a means of enforcing such provisions including sanctions for noncompliance: provided, however, that in the event the contractor becomes involved in, or is threatened with, litigation with a subcontractor or vendor as a result of such direction, the contractor may request the United States to enter into such litigation to protect the interests of the United States.

c. (i) Promoting the use of Small, Minority, and Women-owned Businesses (Executive Orders 11625, 12138 and 12432), (ii) Small Businesses Reauthorization & Amendment Act of 1988 (Section 129 of Pub. L. 100-590), (iii) Department of Veterans Affairs and Housing and Urban Development, and Independent Agencies Appropriations Act, 1993 (Pub. L. 102-389, 42 U.S.C. Sec. 437d), and (iv) Title X of the Clean Air Acts Amendments of 1990 (Pub. L. 101-549, 42 U.S.C. Sec. 7601 note) ("EPA's 10% statute"). Encourages recipients to award construction, supply and professional service contracts to minority and women's business enterprises (MBE/WBE) and small businesses and requires recipients to utilize affirmative steps in procurement.

d. Participation by Disadvantaged Business Enterprises in Procurement under Environmental Protection Agency (EPA) Financial Assistance Agreements (40C.F.R. Part 33).

   (i) The prime contractor must pay its subcontractor for satisfactory performance no more than 30 days from the prime contractor's receipt of payment from the owner.

   (ii) The prime contractor must notify the owner in writing prior to the termination of any Disadvantaged Business Enterprise subcontractor for convenience by the prime contractor.

   (iii) If a Disadvantaged Business Enterprise contractor fails to complete work under the subcontract for any reason, the prime contractor must employ the six goodfaith efforts if soliciting a replacement contractor.

   (iv) The prime contractor must continue to employ the six good faith efforts even if the prime contractor has achieved its fair share objectives.

   (v) The contractor shall not discriminate on the basis of race, color, national origin or sex in the performance of this contract. The contractor shall carry out applicable requirements of 40 CFR Part 33 in the award and administration of contracts awarded under EPA financial assistance agreements. Failure by the contractor to carry out these requirements is a material breach of this contract which may result in the termination of this contract or other legally available remedies.

e. Debarment and Suspension (Executive Order 12549). Prohibits entering into contracts or sub-contracts with individuals or businesses who are debarred or suspended. Borrowers are required to check the status of all contractors (construction and professional services) and must require contractors to check the status of subcontractors for contracts expected to be equal to or over $25,000 via this Internet address: https://www.sam.gov/SAM/.

f. E-Verify (A.R.S. § 41-4401). A governmental entity shall not award a contract to any contractor or subcontractor that fails to comply with A.R.S. § 23-214(A). Every

government entity shall (i) ensure that every government entity contractor and subcontractor complies with the federal immigration laws and regulations thatrelate to their employees and A.R.S. § 23-214(A); (ii) require that every government entity contract include the required provisions listed under A.R.S. §41-4401(A); and (iii) establish procedures to conduct random verification of the employment records of government entity contractors and subcontractors.

g. American Iron and Steel - Public Law 113-76, enacted January 17, 2014.

h. Federal Davis-Bacon prevailing wages apply to this project.

(i) Payment of the wages, fringe benefits and overtime rates shall be in accordance with the Federal (Davis-Bacon) Prevailing Wage Decision included in the bidding and contract documents.

(ii) Certified payroll shall be submitted to the owner or owner's representative on a weekly basis.

(iii) Overtime requirements. No contractor or subcontractor contracting for any part of the contract work which may require or involve the employment of laborers or mechanics shall require or permit any such laborer or mechanic in any work week in which he or she is employed on such work to work in excess of 40 hours in such work week unless such laborer or mechanic receives compensation at a rate not less than one and one-half times the basic rate of pay for all hours worked in excess of 40 hours in such workweek.

(iv) Violation; liability for unpaid wages; liquidated damages. In the event of any violation of the clause set forth in paragraph (iii) of this section the contractor and any subcontractor responsible therefore shall be liable for the unpaid wages. In addition, such contractor and subcontractor shall be liable to the United States (in the case of work done under contract for the District of Columbia or a territory, to such District or to such territory), for liquidated damages. Such liquidated damages shall be computed with respect to each individual laborer or mechanic, including watchmen and guards, employed in violation of the clause set forth in paragraph (iii) of this section, in the sum of $10 for each calendar day on which such individual was required or permitted to work in excess of the standard work week of 40 hours without payment of the overtime wages required by the clause set forth in paragraph (iii) of this section.

(v) Withholding for unpaid wages and liquidated damages. The subrecipient**,** upon writtenrequest of the EPA Award Official or an authorized representative of the Department ofLabor, shall withhold or cause to be withheld, from any moneys payable on account of work performed by the contractor or subcontractor under any such contract or any other Federal contract with the same prime contractor, or any

other federally-assisted contract subject to the Contract Work Hours and Safety Standards Act, which is held by the same prime contractor, such sums as may be determined to be necessary to satisfy any liabilities of such contractor or subcontractor for unpaid wages and liquidated damages as provided in the clause set forthin paragraph (iv) of this section.

(vi) Subcontracts. The contractor or subcontractor shall insert in any subcontracts the clauses set forth in paragraph (i) through (v) of this section and also a clause requiring the subcontractors to include these clauses in any lower tier subcontracts. The prime contractor shall be responsible for compliance by any subcontractor or lower tier subcontractor with the clauses set forth in paragraphs (i) through (v) of this section.

(vii) The contractor or subcontractor shall maintain payrolls and basic payroll records during the course of the work and shall preserve them for a period of three years from the completion of the contract for all laborers and mechanics, including guards and watchmen, working on the contract. Such records shall contain the name and address of each such employee, social security number, correct classifications, hourly rates of wages paid, daily and weekly number of hours worked, deductions made, and actual wages paid. Such records shall be made available by the contractor or subcontractor for inspection, copying, or transcription by authorized representatives of the recipient and the Department of Labor, and the contractor or subcontractor will permit such representatives to interview employees during working hours on the job.

12. Interest of Members of a Governing Body

No member of the governing body of the CITY and no other officer, employee or agent of the CITY who exercises any functions or responsibilities in connection with the planning and carrying out of the program, shall have any personal financial interest, direct, or indirect, in this Contract and the CONTRACTOR shall take appropriate steps to assure compliance.

13. Interest of Other Local Public Officials

No member of the governing body of the locality and no other public official of such locality who exercises any functions or responsibilities in connection with the planning and carrying out of the program, shall have any personal financial interest, direct or indirect, in this Contract and the CONTRACTOR shall take appropriate steps to assure compliance.

14. Interest of CONTRACTOR and Employees

The CONTRACTOR covenants that he/she presently has no interest and shall not acquire interest, direct or indirect, in the study area or any parcels therein or any other interest which would conflict in any manner or degree with the performance of his/her services hereunder. The CONTRACTOR further covenants that no person having any such interest shall be employed in the performance of this Contract.

15. Access for Persons with Disabilities

In performing all construction CONTRACTOR agrees to comply with the 2010 ADA Standards for Accessible Design. CONTRACTOR represents that he understands said standard specifications and same are incorporated herein by this reference.

IN WITNESSETH HEREOF, the parties have hereunto set their hands and seals.

Approved as to Form:

The City of Nogales

_____

Edward Dickie, City Manager

_____

Jose L. Machado, City Attorney

ATTEST:

_____

Leticia Robinson, Nogales City Clerk

CONTRACTOR:

_____

By_____

Its _____

LABOR AND MATERIALS PAYMENT BOND

STATUTORY PAYMENT BOND PURSUANT TO TITLE 34, CHAPTER 2, ARTICLE 2, OF THE ARIZONA REVISED STATUTES (Penalty of this bond must be 100% of the Contract amount)

KNOW ALL MEN BY THESE PRESENTS:

That, _____ (hereinafter called the Principal), and _____, a corporation organized and existing under the laws of the State of _____, and duly licensed and possessing a certificate of authority to transact surety business in the State of Arizona, with its principal office in the _____, (hereinafter called the Surety) as Surety are held firmly bound unto the _____ of _____ (hereinafter called the Obligee) in the amount of _____ _____ dollars ($_____) for the payment whereof, the said Principal and Surety bind themselves, and their heirs, administrators, administrators, executors, successors, and assigns, jointly and severally firmly by these presents.

WHEREAS, the Principal has entered into a certain written contract with the Obligee dated the _____ day of _____, 2022, to construct the **Royal Road Water Main Replacement, Bid WIW-2022-01,** which contract is hereby referred to and made a part hereof as fully and to the same extent as if copied at length herein.

NOW, THEREFORE, THE CONDITION OF THE OBLIGATION IS SUCH, that if the Principal promptly pays all moneys due to all persons supplying labor or materials to the Principal or the Principal's subcontractors in the prosecution of the work provided for in the contract, this obligation is void, otherwise it remains in full force and effect.

PROVIDED, HOWEVER, that this bond is executed pursuant to the provisions of Title 34, Chapter 2, Article 2, of the Arizona Revised Statutes, and all liabilities on this bond shall be determined in accordance with the provisions, conditions and limitations of Title 34, Chapter 2, Article 2, Arizona Revised Statutes to the same extent as if it were copied at length in the Agreement.
The prevailing party in a suit on this bond shall recover as part of the judgment reasonable attorney fees that may be fixed by a judge of the court.

Witness our hands this ___ day of _____, 2022.

_____
PRINCIPAL SEAL

_____
AGENCY OF RECORD

BY_____

_____

_____
AGENCY ADDRESS

SURETY

BY_____

PERFORMANCE BOND

STATUTORY PERFORMANCE BOND PURSUANT TO TITLE 34, CHAPTER 2, ARTICLE 2, OF THE ARIZONA REVISED STATUTES (Penalty of this bond must be 100% of the Contract amount)

KNOW ALL MEN BY THESE PRESENTS:

That, _____ (hereinafter called the Principal), as Principal, and _____, a corporation organized and existing under the laws of the State of Arizona and duly licensed and possessing a certificate of authority to transact surety business in the State of _____ with its principal office in _____ (hereinafter called the Surety) as Surety, are held firmly bound unto the _____ of (hereinafter called the Obligee) in the amount of _____ ($_____) for the payment whereof, the said Principal and Surety bind themselves, and their heirs, administrators, executors, successors, and assigns, jointly, and severally, firmly by these presents.

WHEREAS, the Principal has entered into a certain written contract with the Obligee dated the ___ day of _____ , 2022, to construct the **Royal Road Water Main Replacment, Bid WIW-2022-01,** which contract is hereby referred to and made a part hereof as fully and to the same extent as if copied at length herein.

NOW, THEREFORE, THE CONDITION OF THE OBLIGATION IS SUCH, that if the Principal shall faithfully perform and fulfill all of the undertakings, covenants, terms, conditions, and agreements of the contract during the original term of the contract and any extension of the contract with or without notice to the Surety, and during the life of any guaranty required under the contract and also performs and fulfills all of the undertakings, covenants, terms, conditions, and agreements of all duly authorized modifications of the contract that may hereafter be made, notice of which modifications to the Surety being hereby waived; the above obligation is void. Otherwise it remains in full force and effect.

PROVIDED, HOWEVER, that this bond is executed pursuant to the provisions of Title 34, Chapter 2, Article 2, Arizona Revised Statutes, and all liabilities on this bond shall be determined in accordance with the provisions of Title 34, Chapter 2, Article 2, Arizona Revises Statutes, to the extend as if were copied at length in this Agreement.

The prevailing party in a suit on this bond shall recover as part of the judgment reasonable attorney fees that may be fixed by a judge of the court.

Witness our hands this _____ day of _____, 2022.

_____
PRINCIPAL SEAL

_____
AGENCY OF RECORD

BY_____

_____

_____
AGENCY ADDRESS

SURETY

BY_____

NOTICE TO PROCEED – CONSTRUCTION

Date

Name of President/Owner
Name of Company
Address
City, State Zip Code

Dear :

RE: NOTICE TO PROCEED – ROYAL ROAD WATER MAIN REPLACEMENT

You are hereby notified to commence work on the above referenced project on or before _____, 2022, and shall substantially complete all of the work in accordance with the Contract within 180 consecutive calendar days thereafter, or by_____, 2023. The Contract provides for an assessment of the sum of $500 as liquidated damages for each consecutive calendar day after the above established contract completion date that the work remains incomplete. Please complete the acceptance portion of this notice and return it as soon as possible. We look forward to completing a successful project with you.

Dated this ____ day of _____, 2022.

By: _____
Alejandro Barcenas, Public Works Director

- - - -

Contractor's Application for Payment

Owner: _____ **Owner's Project No.:** _____

Engineer: _____ **Engineer's Project No.:** _____ **Contractor:** _____

_____ **Contractor's Project No.:** _____ **Project:** _____

_____ **Contract:** _____

Application No.: _____ **Application Date:** _____

Application Period: **From** _____ **to** _____

1. Original Contract Price	
2. Net change by Change Orders	
3. Current Contract Price (Line 1 + Line 2)	
4. Total Work completed and materials stored to date (Sum of Column G Lump Sum Total and Column J Unit Price Total)	
5. Retainage	
a. _____ X $ - Work Completed	$ -
b. _____ X $ - Stored Materials	$ -
c. Total Retainage (Line 5.a + Line 5.b)	$ -
6. Amount eligible to date (Line 4 - Line 5.c)	$ -
7. Less previous payments (Line 6 from prior application)	
8. Amount due this application	
9. Balance to finish, including retainage (Line 3 - Line 4)	

Contractor's Certification

The undersigned Contractor certifies, to the best of its knowledge, the following:

(1) All previous progress payments received from Owner on account of Work done under the Contract have been applied on account to discharge Contractor's legitimate obligations incurred in connection with the Work covered by prior Applications for Payment;

(2) Title to all Work, materials and equipment incorporated in said Work, or otherwise listed in or covered by this Application for Payment, will pass to Owner at time of payment free and clear of all liens, security interests, and encumbrances (except such as are covered by a bond acceptable to Owner indemnifying Owner against any such liens, security interest, or encumbrances); and

(3) All the Work covered by this Application for Payment is in accordance with the Contract Documents and is not defective.

Contractor: _____

Signature: _____ **Date:** _____

Recommended by Engineer

By: _____

Title: _____

Date: _____

Approved by Owner

By: _____

Title: _____

Date: _____

Approved by Funding Agency

By: _____

Title: _____

Date: _____

By: _____

Title: _____

Date: _____

(c) 2018 National Society of Professional Engineers for EJCDC. All rights reserved.

Progress Estimate - Unit Price Work | **Contractor's Application for Payment**

Owner: _____ **Owner's Project No.:** _____
Engineer: _____ **Engineer's Project No.:** _____
Contractor: _____ **Contractor's Project No.:** _____
Project: _____
Contract: _____

Application No.: _____ **Application Period:** **From** _____ **to** _____ **Application Date:** _____

A	B	C	D	E	F	G	H	I	J	K	L
		Contract Information				Work Completed					
Bid Item No.	Description	Item Quantity	Units	Unit Price ($)	Value of Bid Item (C X E) ($)	Estimated Quantity Incorporated in the Work	Value of Work Completed to Date (E X G) ($)	Materials Currently Stored (not in G) ($)	Work Completed and Materials Stored to Date (H + I) ($)	% of Value of Item (J / F) (%)	Balance to Finish (F - J) ($)
Original Contract											
					-		-		-		-
					-		-		-		-
					-		-		-		-
					-		-		-		-
					-		-		-		-
					-		-		-		-
					-		-		-		-
					-		-		-		-
					-		-		-		-
					-		-		-		-
					-		-		-		-
					-		-		-		-
					-		-		-		-
					-		-		-		-
					-		-		-		-
					-		-		-		-
					-		-		-		-
					-		-		-		-
					-		-		-		-
					-		-		-		-
				Original Contract Totals	$ -		$ -	$ -	$ -		$ -

EJCDC C-620 Contractor's Application for Payment
(c) 2018 National Society of Professional Engineers for EJCDC. All rights reserved.

Progress Estimate - Unit Price Work | **Contractor's Application for Payment**

Owner: _____ **Owner's Project No.:** _____
Engineer: _____ **Engineer's Project No.:** _____
Contractor: _____ **Contractor's Project No.:** _____
Project: _____
Contract: _____

Application No.: _____ **Application Period:** **From** _____ **to** _____ **Application Date:** _____

A	B	C	D	E	F	G	H	I	J	K	L
		Contract Information				Work Completed					
Bid Item No.	Description	Item Quantity	Units	Unit Price ($)	Value of Bid Item (C X E) ($)	Estimated Quantity Incorporated in the Work	Value of Work Completed to Date (E X G) ($)	Materials Currently Stored (not in G) ($)	Work Completed and Materials Stored to Date (H + I) ($)	% of Value of Item (J / F) (%)	Balance to Finish (F - J) ($)
					Change Orders						
					-		-		-		-
					-		-		-		-
					-		-		-		-
					-		-		-		-
					-		-		-		-
					-		-		-		-
					-		-		-		-
					-		-		-		-
					-		-		-		-
					-		-		-		-
					-		-		-		-
					-		-		-		-
					-		-		-		-
					-		-		-		-
					-		-		-		-
					-		-		-		-
					-		-		-		-
					-		-		-		-
					-		-		-		-
					-		-		-		-
				Change Order Totals	$ -		$ -	$ -	$ -		$ -
					Original Contract and Change Orders						
				Project Totals	$ -		$ -	$ -	$ -		$ -

EJCDC C-620 Contractor's Application for Payment
(c) 2018 National Society of Professional Engineers for EJCDC. All rights reserved.

SECTION A

SPECIAL PROVISIONS

CITY OF NOGALES
ROYAL ROAD WATER MAIN
REPLACEMENT

GENERAL CONDITIONS

ARTICLE 1
DEFINITIONS AND GENERAL PROVISIONS

1.1 PROJECT OR WORK. The term “Project” or “Work” includes, without limitation, furnishing all labor, administrative services and supervision necessary to produce the construction required by the Contract Documents and furnishing and installing all materials and equipment incorporated, or to be incorporated in such construction to complete the Project.

1.2 CONTRACT DOCUMENTS

1.2.1 The Agreement shall be signed by the Owner and the Contractor. By executing the Agreement, each party accepts and agrees to be bound by each of the Contract Documents listed in Paragraph 8 of the Agreement.

1.2.2 By executing the Agreement, the Contractor represents and warrants that he has examined closely the site and the existing structures, if any, including the materials and methods of construction utilized in and the condition of the existing structures, has familiarized himself with the local conditions under which the Work is to be performed, including any and all relevant weather conditions or records or both, and correlated all of his observations with the provisions and requirements of the Contract Documents including, but not limited to, the details of demolition and construction indicated by the Drawings and Specifications. Where discrepancies in quantities, materials, sizes or other conditions exist between the existing structure and the Drawings and Specifications, the Contractor shall accomplish the Work required to carry out the intent of the Contract Documents and the actual requirements of the existing structure shall take precedence over the Plans and Specifications for purposes of determining the quantity and nature of the Work required herein.

1.2.3 The Contract Documents are complementary, and what is required by any one shall be as binding as if required by all. The intention of the Contract Documents is to include, without limitation, all labor, materials, equipment and other items as provided in Article 4 necessary for the proper execution and completion of the Work. Words which have well known technical or trade meanings are used herein in accordance with such recognized meanings.

1.2.4 The organization of the Specifications, if any, into divisions, sections and articles, and the arrangements of Drawings shall not control the Contractor in dividing the Work among Subcontractors or in establishing the extent of Work to be performed by any trade, or constituting part of the contract or having any legal or contractual significance.

1.2.5 Written interpretations necessary for the proper execution or progress of the Work, in the form of drawings or otherwise will be issued with reasonable promptness by the Project Administrator in accordance with any schedule agreed upon or with reasonable promptness in any case. Such interpretations shall be consistent with and reasonably inferable from the Contract Documents, and may be effected or memorialized later by Field Order.

1.2.6 The Agreement, including all documents referenced therein, and these General Conditions represent the entire and integrated agreement between the parties and supersede all prior negotiations, representations or agreements, either written or oral, including the bidding documents to the extent that they may contain contrary provisions.

1.2.7 The Contract and General Conditions may only be amended or modified pursuant to a written modification signed by both parties.

1.3 COPIES FURNISHED AND OWNERSHIP. The Contractor will be furnished, free of charge, all copies of Drawings and Specifications reasonably necessary for the execution of the Work, as determined by the Project Administrator.

1.3.1 All Drawings, Specifications and other data, and copies thereof, furnished to the Contractor are and shall remain the property of the Owner. They are not to be used on any other project and, with the exception of one set for each party of the Agreement, are to be returned to the Owner upon request at the completion of the Work.

1.3.2 It shall be the responsibility of the Contractor to insure that each subcontractor and material supplier has a current set of Drawings, Specifications and Addenda, as required for proper execution of their respective portions of the Work.

1.4 OWNER / PROJECT ADMINISTRATOR

1.4.1 OWNER. The Owner is the City of Nogales.

1.4.2 PROJECT ADMINISTRATOR. The Project Administrator shall be the City of Nogales Public Works Director or other person designated by Owner.

1.4.3 The Owner will issue instructions directly to Contractor through its Project Administrator.

1.5 INFORMATION AND SERVICES REQUIRED OF THE OWNER

1.5.1 Information or services under the Owner's control shall be furnished by the Owner with reasonable promptness to avoid delay in the orderly progress of the Work.

1.5.2 The Owner will issue instructions directly to the Contractor through its Project Administrator.

1.5.3 All final decisions concerning Change Orders, Payments, Substantial Completion, Final Completion, Liquidated Damages and Contract Time shall be reserved to the Owner’s City Manager and this provision of the Agreement shall take precedence over any other term hereof.

1.6 CONTRACTOR

1.6.1 The Contractor is the person or organization identified as such in the Contract and the term "Contractor" means the Contractor or its authorized representative. Throughout this document, pronouns referring to the Contractor shall be “its” or “his.”

1.7 PROJECT MATERIALS

1.7.1 All materials and articles of any kind necessary for this Work are subject to the approval of the Project Administrator and his judgment and decision shall be final and conclusive.

1.7.2 After execution of the Contract, changes of brand named, trade named, trademarked, patented articles, or any other substitutions will be allowed only by written order signed by the Project Administrator, in which case the Owner shall receive all benefit of the difference in cost involved, except where choice of material or method is designated "or equal" in the specifications.

ARTICLE 2
REVIEW OF CONTRACT DOCUMENTS AND SITE CONDITIONS

2.1 By executing this Agreement the Contractor warrants that he has carefully studied and compared the Agreement, General Conditions, Drawings, Specifications, Addenda, all other Contract Documents and the existing structure and has determined that the Contract Documents describe a completely buildable and functional Project. The Contractor does not warrant the suitability or feasibility of the Owner's proposed operation of the Project. The Contractor shall at once report to the Project Administrator any error, inconsistency or omission he may discover. The Contractor shall not be liable to the Owner for any damage resulting from any such errors, inconsistencies or omissions so long as the Owner is notified promptly thereof unless discovery of such error, inconsistency or omission should have been made by careful examination of the Contract Documents prior to submitting a Proposal.

2.2 The Contractor shall be required to use for data and dimensions, figures marked on the Drawings in preference to what the Drawings may measure to scale. In the absence of figured dimensions, the Project Administrator shall be notified and the scale dimension verified.

2.3 The Contractor shall verify all dimensions shown and check all measurements in connection with any present improvements, driveways, or other existing conditions, before executing any work.

2.4 The Contractor agrees to comply fully with all applicable state, federal and local laws. Contractor agrees to indemnify and hold harmless the Owner from all claims or whatever nature involving failure of the Contractor or any of its Subcontractors to comply with any federal, state or local law or ordinance in connection with this Project.

2.5 It is the Contractor’s responsibility to inspect the site of the work to identify any surface or subsurface conditions or underground facilities that can be reasonably identified and that

are materially different than what may be indicated in the Contract Documents prior to beginning the Work.

2.6 If the Contractor believes that any surface, subsurface or physical condition at the work site that is uncovered or revealed is of such a nature as to require a Change Order, because it either differs materially from that which is specifically designated on the Contract Documents or is of an unusual nature and differs materially from conditions ordinarily encountered and generally recognized as inherent in work of the character required by the Agreement at this location, then the Contractor shall promptly notify the Project Administrator in writing prior to further disturbing the site and performing the Work. The Project Administrator shall promptly review such notice and the conditions and advise the Contractor whether additional tests may be required or a revision of the Drawings may be appropriate. The Contractor shall not be entitled to an adjustment in the Contract Price or Contract Time if the Contractor knew or should have known of the existence of such conditions at the time the Bid was submitted; the existence of the condition could reasonably have been discovered or revealed as a result of the investigation or study of the site as required of the Contractor, or the Contractor failed to provide written notice of condition, as required in this section.

2.7 The information and data shown or indicated on the Contract Documents with respect to underground facilities at or around the location of the work is based upon information and data provided by the owners of these facilities. The Owner is not responsible for the accuracy or completeness of this information. The Contractor is required to verify the location any such utilities and to comply with all applicable laws and regulation regarding the location and protection of utilities. No additional compensation shall be provided for complying with these obligations.

2.8 SANITATION. The Contractor shall provide temporary sanitation facilities for the use of employees on this construction. Following the period of necessity for such facilities, they shall be removed and all evidence thereof effaced.

2.9 USE OF PREMISES. The Contractor shall confine his equipment and plant, the storage of materials, and the operations of his workmen to limits indicated by law, ordinances, permits, or directions of the Project Administrator and shall not unreasonably encumber the premises with materials or equipment.

2.10 The Contractor shall enforce the Project Administrator's instructions regarding signs, advertisement, fires, and smoking.

ARTICLE 3
SUPERVISION AND CONSTRUCTION PROCEDURES

3.1 The Contractor shall supervise the Work, using his best skill and attention. He shall be solely responsible for all construction means, methods, techniques, sequences and procedures and for coordinating all portions of the Work under the Agreement.

3.2 Contractor shall hold periodic meetings as often as reasonably required, but at least one a week, with subcontractors to monitor the progress of the Work. A report of the results of

each such meeting shall be included in the Daily Report required by Subparagraph 10.2 herein. Contractor shall inform the Project Administrator at least twenty-four (24) hours in advance of the time for each meeting.

ARTICLE 4
LABOR AND MATERIALS

4.1 Unless otherwise specifically noted, the Contractor shall provide and pay for all labor, material, equipment, tools, construction equipment, machinery, water, heat, utilities, waste and refuse disposal, transportation and any other facilities and services necessary for the proper execution and completion of the Work whether temporary or permanent and whether or not incorporated or to be incorporated in the Work.

4.2 Any work necessary to be performed after regular working hours, on Sundays, or legal holidays, shall be performed without additional expense to the Owner.

4.3 The Contractor shall at all times enforce strict discipline and good order among his employees and shall not employ on the Work any unfit person or anyone not skilled in the task assigned to him. When requested in writing by the Project Administrator, the Contractor shall remove from the Project any person who commits trespass or is, in the reasonable opinion of the Project Administrator, disorderly, dangerous, insubordinate, incompetent, or otherwise objectionable. The Contractor shall keep the Owner harmless from damages or claims for compensation that may occur in the enforcement of this requirement.

ARTICLE 5
WARRANTY

5.1 The Contractor warrants to the Owner that all material and equipment furnished under this Agreement will be new unless otherwise specified, and that all Work will be of good quality, free from faults and defects and in conformance with the Contract Documents.

5.1.1 Faults or defects are considered to be any aspect of the Work that is found not to be in conformance with the Contract Documents at any stage of the Work or upon inspection, or any aspect of the Work that materially deteriorates, becomes non-functional or otherwise fails, in some functional or aesthetic manner, to meet the requirements of the Contract Documents within two years after issuance of Certificate of Completion, normal wear and tear excepted, as further set forth in Article 36 hereof.

5.1.2 All Work not so conforming to these standards may be considered defective. If required by the Project Administrator, the Contractor shall furnish satisfactory evidence as to the kind and quality of materials and equipment.

5.2 The warranty provided in this article shall be in addition to and not in limitation of any other warranty or remedy required by law or by the Contract Documents.

ARTICLE 6
TAXES

6.1 The Contractor shall pay all sales, consumer, use, transaction privilege and other taxes required by law arising out of construction or other business activities of the Contractor in connection with the Project and in connection with the performance of this Agreement, whether in force as of the date of this Agreement or later imposed.

ARTICLE 7
PERMITS, FEES AND NOTICES

7.1 Unless otherwise provided in the Drawings, Specifications or by Addendum, Contractor will secure all permits, fees and licenses necessary for the proper execution and completion of the Work, including, but not limited to, building, plumbing, mechanical, electrical, and fire protection permits, but excluding plan check fees, which shall be paid for by the Owner.

7.2 The Contractor shall pay for water meters, fire protection, water service, sewer connection, sewer fees or assessments, gas service, and electric service to procure all necessary utilities for the Project and for temporary utility hook-ups required during the course of construction. The Contractor shall pay for electric power and water necessary for the construction of the Project.

7.3 The Contractor shall give all notices and comply with all laws, ordinances, rules, regulations and orders of any public authority bearing on the performance of the Work. If the Contractor observes that any of the Contract Documents are at variance therewith in any respect, he shall promptly notify the Project Administrator in writing. If the Contractor performs any work knowing it to be contrary to such laws, ordinances, rules and regulations, and without such notice to the Project Administrator, he shall assume full responsibility therefore and shall bear all costs attributable thereto, including any reasonable attorney's fees incurred by Owner in connection therewith.

ARTICLE 8
SUPERINTENDENT

8.1 The Contractor shall employ a competent Superintendent and necessary assistants who shall be in attendance at the Project site during the progress of the Work.

8.2 The Superintendent shall be satisfactory to the Project Administrator and shall not be changed except with the consent of the Project Administrator.

8.3 The Superintendent shall represent the Contractor, and all communications given to the Superintendent shall be as binding as if given to the Contractor. Important communications will be confirmed in writing. Other communications will be so confirmed on written request in each case.

ARTICLE 9
RESPONSIBILITY FOR THOSE PERFORMING THE WORK

9.1 The Contractor shall be responsible to the Owner for the acts and omissions of all his employees and all Subcontractors, their agents and employees, and all other persons

performing any of the Work or supplying any material or equipment to be incorporated in the Work under a contract of any nature with the Contractor.

ARTICLE 10
PROGRESS SCHEDULE AND REPORTS

10.1 The Contractor, immediately after being awarded the Contract, shall prepare and submit for the Project Administrator's approval an estimated Progress Schedule for the Work.

10.1.1 The progress schedule shall be related to the entire Project and shall indicate the dates for the starting and completion of the various components and phases of construction and shall be revised as required by the conditions of the Work, upon request of and subject to the approval of the Project Administrator.

10.1.2 The Contractor agrees to promptly respond to all inquiries by the Project Administrator concerning substantial deviation of the progress of construction from the Progress Schedule. Failure to timely respond to such request or substantial delay from the schedule may result in progress payments being withheld.

10.1.3 The Progress Schedule shall include projected dates of submittal of all items of material for which submittals are required and shall include delivery dates of all items of material and equipment that are considered critical or long lead time.

10.1.4 The Contractor shall submit a biweekly report summarizing all deviations from the Progress Schedule that will or may result in delay of the Project.

10.2 The Contractor shall prepare and submit for the Owner's information, review and approval for the duration of the Work a Daily Report in a form acceptable to Owner. The Daily Report shall be completed daily and submitted to the Project Administrator on a weekly basis as a statement and review of the progress of the Work.

10.3 The Contractor shall furnish sufficient labor force, materials, plant, and equipment to ensure the prosecution of the Work in accordance with the approved Progress Schedule.

10.3.1 If the Contractor's prosecution of the Work falls behind the Progress Schedule, Contractor shall take such steps as may be necessary to regain compliance with the Progress Schedule including additional labor or services or work such overtime as may be necessary to bring his operations up to schedule.

10.3.2 Failure to maintain schedule or to take the above steps to regain the agreed Progress Schedule shall constitute default under this Agreement.

ARTICLE 11
DRAWINGS AND SPECIFICATIONS AT THE SITE

11.1 The Contractor shall maintain at the site for the Project Administrator one (1) copy of all Drawings, Specifications, Addenda, approved Shop Drawings, Change Orders, other Modifications, and manufacturers' printed specifications and recommendations, in good

order and marked carefully and accurately to record all changes made during construction and shall be available to the Project Administrator at all times.

11.2 Upon completion of the Project, a clean set of Drawings shall be accurately marked to depict the as-built condition of the Project, and these Drawings along with all record drawing, shall be delivered to the Owner upon completion of the Work.

11.3 The Contractor shall also submit to the Project Administrator for his record all manufacturers' maintenance manuals, printed specifications and recommendations, which by reference in the several divisions of the specifications are a part thereof.

ARTICLE 12
SHOP DRAWINGS, PRODUCT DATA AND SAMPLES

12.1 Shop Drawings and Product Data are drawings, diagrams, illustrations, schedules, performance charts, brochures and other data which are prepared or supplied by the Contractor or any Subcontractor, Sub-subcontractor, manufacturer, supplier or distributor, and which illustrate or describe some portion of the Work.

12.2 Samples are physical examples furnished by the Contractor to illustrate materials, equipment or workmanship, and to establish standards by which the Work will be judged.

12.3 The Contractor shall review, stamp with his approval and submit, with promptness and in orderly sequence so as to cause no delay in the Work or in the work of any other contractor, all Shop Drawings, Product Data and Samples required by the Contract Documents or subsequently by the Project Administrator as covered by Modifications.

12.4 The Contractor shall, within ten (10) days after the notice to proceed, submit to the Project Administrator for his approval a schedule indicating the date that each required Shop Drawing and Product Data submittal will be delivered to Project Administrator. Shop Drawings, Product Data and Samples shall be properly identified as specified, or as the Project Administrator may require. At the time of submission the Contractor shall inform the Project Administrator in writing of any deviation of the Shop Drawings, Product Data or Samples from the requirements of the Contract Documents.

12.5 By approving and submitting Shop Drawings, Product Data and Samples, the Contractor thereby represents that he has determined and verified all field measurements, field construction criteria, materials, catalog numbers and similar data, or will do so, and that he has checked and coordinated each Shop Drawing, Product Data and Sample with the requirements of the Work and of the Contract Documents.

12.6 The Project Administrator will review and return Shop drawings, Product Data and Samples with reasonable promptness so as to cause no delay, but such review is only for conformance with the design concept of the Project and with the information given in the Contract Documents. The Project Administrator’s approval of a separate item shall not indicate approval of an assembly in which the item functions.

12.7 The Contractor shall make any corrections required by the Project Administrator to comply with the Contract Documents and shall resubmit the required number of corrected copies of Shop Drawings, Product Data or new Samples until approved. The Contractor shall direct specific attention in writing or on resubmitted Shop Drawings or Product Data to revisions other than the corrections requested by the Project Administrator on previous submissions.

12.8 The Project Administrator's approval of Shop Drawings, Product Data or Samples shall not relieve the Contractor of responsibility for any deviation from the requirements of the Contract Documents unless the Contractor has informed the Project Administrator in writing of such deviation at the time of submission and the Project Administrator has given written approval to the specific deviation, nor shall the Project Administrator's approval relieve the Contractor from responsibility for errors or omissions in the Shop Drawings or Samples.

12.9 No portion of the Work requiring a Shop Drawing, Product Data or Sample submission shall be commenced until the submission has been approved by the Project Administrator. All such portions of the Work shall be in accordance with approved Shop Drawings, Product Data and Samples.

ARTICLE 13
CLEANING UP

13.1 The Contractor at all times during the progress of the Work shall keep the premises free from accumulation of waste materials or rubbish caused by his operations. At the completion of the Work he shall remove all his waste materials and rubbish from and about the Project as well as all his tools, construction equipment, machinery and surplus materials specified to be left at the site, and shall clean all glass surfaces.

13.2 If the Contractor fails to satisfactorily clean up, the Owner will do so and the cost thereof shall be charged to the Contractor or Subcontractors as the Owner shall determine to be just.

ARTICLE 14
COMMUNICATIONS

14.1 The Contractor shall forward all communications to the Project Administrator except where otherwise required herein.

14.2 The Contractor shall provide a point of contact to the Project Administrator including a phone number at which he may be reached at all times.

14.3 All email communications shall be deemed to be written communications, received at or about the time they were sent.

ARTICLE 15
INDEMNIFICATION CLAUSE

15.1 Contractor shall comply with the requirements of all applicable laws, rules and regulations and shall exonerate, indemnify and hold harmless the CITY and its employees and officers,

["Indemnified Parties"] from and for any violation caused by him and shall assume full responsibility for payment of federal, state and local taxes on contributions imposed or required under the Social Security, workers' compensation and income tax laws. This section shall survive any termination of this Agreement.

15.2 INDEMNIFICATION. To the fullest extent permitted by law, the Contractor shall defend, indemnify and hold harmless the Owner, its agents, officers, officials and employees from and against all claims, damages, losses and expenses (including but not limited to attorney fees, court costs, and the cost of appellate proceedings), relating to, arising out of or alleged to have resulted from the acts, errors, mistakes, omissions, work or services of the Contractor, its agents, employees, or any tier of Contractor's Subcontractors in the performance of this Agreement. Contractor's duty to defend, hold harmless and indemnify the Owner, its agents, officers, officials and employees shall arise in connection with any tort claim, damage, loss or expense that is attributable to bodily injury, sickness, disease, death, or injury to, impairment, or destruction of property including loss of use resulting there from, caused by the Contractors' acts, errors, mistakes, omissions, work or services in the performance of this Agreement including any employee of the Contractor, any tier of Contractor's Subcontractor or any other person for whose acts, errors, mistakes, omissions, work or services the Contractor may be in legally liable.

15.3 The amount and type of insurance coverage requirements set forth herein will in no way be construed as limiting the scope of the indemnity in this paragraph.

ARTICLE 16
AWARD OF SUBCONTRACTS AND OTHER CONTRACTS FOR PORTIONS OF THE WORK

16.1 Prior to the award of the contract, the Contractor shall supply to the Owner a complete list of subcontractors and material vendors. The Project Administrator shall notify the apparent successful bidder in writing if the Owner has reasonable objection to any person or organization on the list of subcontractors and material vendors. Failure of the Owner to make an objection to any person or organization on the list prior to the award shall constitute acceptance of such person or organization.

16.2 If, prior to the award of the Contract, the Owner has a reasonable and substantial objection to any person or organization of such list, and refuses in writing to accept such person or organization, the apparent successful bidder may prior to the award, withdraw his bid without forfeiture of bid security. If the bidder submits an acceptable substitute with an increase in his bid price to cover the difference in cost occasioned by such substitution before the award, the Owner may, at his discretion accept the increased bid price or he may disqualify the bid. If, after the award, the Owner refuses to accept any person or organization on such list, the Contractor shall submit an acceptable substitute and the Contract Amount shall be increased or decreased by the difference in cost occasioned by such substitution and an appropriate Change Order shall be issued; however, no increase in the Contract Amount shall be allowed for any such substitution unless the Contractor has acted promptly and responsibly in submitting a name with respect thereto.

16.3 The Contractor shall not contract with any Subcontractor proposed for portions of the Work designated in the bidding requirements or if none is so designated, with any Subcontractor proposed for the principal portions of the Work who has not been accepted by the Owner. The Contractor will not be required to contract with any Subcontractor against whom he has a reasonable objection.

16.4 If the Owner, without cause, requires a change of any proposed Subcontractor previously accepted by it, the Contract Amount shall be increased or decreased by the difference in cost occasioned by such change and an appropriate Change Order shall be issued.

16.5 The Contractor shall not make any substitution for any Subcontractor who has been accepted by the Owner unless the substitution is approved in writing by the Owner.

ARTICLE 17
SUBCONTRACTUAL RELATIONS

17.1 All work performed for the Contractor by a Subcontractor shall be pursuant to an appropriate written agreement between the Contractor and the Subcontractor (and where appropriate between Subcontractors and Sub-subcontractors) which shall contain provision that:

17.1.1 Preserve and protect the rights of the Owner under the Agreement with respect to the Work to be performed under the subcontract so that the subcontracting thereof will not prejudice such rights.

17.1.2 Require that such work be performed in accordance with the requirements of the Contract Documents, including, but not limited to:

a. Require submission to the Contractor of applications for payment under each subcontract to which the Contractor is a party, in reasonable time to enable the Contractor to apply for payment in accordance with Article 26;

b. Require that all claims for additional costs, extensions of time, damages for delays or otherwise with respect to subcontracted portions of the Work shall be submitted to the Contractor (via any Subcontractor or Sub-subcontractor where appropriate) in the manner provided in the Contract Documents for like claims by the Contractor upon the Owner pursuant to Article 33;

c. Obligate such Subcontractor specifically to consent to the provisions of this Article 17;

d. Require such Subcontractor to submit a lien waiver and release of claim in a form prescribed by the Owner along with each application for payment, which release and waiver shall in turn be given to the Owner and which shall cover all Work done prior to the date of the application for payment;

e. Require such Subcontractor to comply with all laws, indemnify Owner and agree to the provision of Paragraphs 2.4 and 1.6;

f. Require such Subcontractor to comply with any Labor Standards or other Federal and State regulations required by the Contract Documents.

17.1.3 Waive all rights the contracting parties may have against one another for damages caused by fire or other perils covered by the property insurance described in Article 31, except such rights as they may have to the proceeds of such insurance held by the Owner as trustee under Article 31.

ARTICLE 18
PAYMENTS TO SUBCONTRACTORS

18.1 The Project Administrator may, on request and at this discretion, furnish to any Subcontractor, if practicable, information regarding percentages of completion certified to the Contractor on account of work done by such Subcontractors.

18.2 The Owner shall have no obligation to pay or to see to the payment of any monies to any Subcontractor except as may otherwise be provided in this Agreement.

ARTICLE 19
SEPARATE CONTRACTS

The Owner reserves the right to award other contracts in connection with other portions of the Project under conditions similar to this Agreement.

ARTICLE 20
MUTUAL RESPONSIBILITY OF CONTRACTORS

20.1 The Contractor shall afford other contractors reasonable opportunity for the introduction and storage
of their materials and equipment and the execution of their work, and shall properly connect and coordinate his Work with theirs.

20.2 If any part of the Contractor's Work depends for proper execution or results upon the work of any other separate contractor, the Contractor shall inspect and promptly report to the Project Administrator any apparent discrepancies or defects in such work that render it unsuitable for such proper execution and results. Failure of the Contractor to so inspect and report shall constitute an acceptance of the other contractor's work as fit and proper to receive his Work, except as to defects which may develop in the other separate contractor's work after the execution of the Contractor's Work.

20.3 Should the Contractor cause damage to the Work or property of any separate contractor on the Project, the Contractor shall, upon written notice, promptly settle such other contractor's claim, if he will so settle. If such separate contractor sues the Owner on account of any damage alleged to have been so sustained, the Owner shall defend such proceedings at the Contractor's expense, and if any judgment against the Owner arises there from, the

Contractor shall promptly pay or satisfy it and shall immediately, upon presentation to it of a statement thereof, reimburse the Owner for all attorney's fees and court costs which the Owner has incurred.

ARTICLE 21
MISCELLANEOUS PROVISION

21.1 LAW OF THE PLACE. The Agreement shall be governed by the law of Arizona and any action relating to this Agreement shall be brought in an Arizona court of competent jurisdiction located in the County of jurisdiction for the Owner.

21.2 SUCCESSORS AND ASSIGNS. The Owner and the Contractor each binds himself, his partners, successors, assigns and legal representatives to the other party hereto and to the partners, successors, assigns and legal representatives of such other party in respect to all covenants' agreements and obligations contained in the Contract Documents. The Contractor shall not assign the Agreement or any part hereof or sublet it as a whole or in part without the previous written consent of the Owner, nor shall the Contractor assign or pledge any monies due or to become due to him hereunder, without the previous written consent of the Owner.

21.3 WRITTEN NOTICE. Written notice shall be deemed to have been duly served if delivered in person to the individual for whom it was intended, or if delivered at or sent by registered or certified mail to the last business address known to him who gives the notice as appropriate. Notice to the Project Administrator is notice to the Owner except for notice of inconsistencies, error or omission in the Contract Documents, request for extension of time, request for changes in the Contract Amount, appeal of decisions by Project Administrator and notice of claim or legal process. All such notices shall be given to both Project Administrator and Owner's Public Works Director if he is not designated the Project Administrator.

21.4 CLAIMS FOR DAMAGES. Should either party of the Agreement suffer injury or damage to person or property because of any act or omission of the other party or of any of his employees, agents or others for whose acts he is legally liable, claim shall be made in writing to such other party within a reasonable time after the first observance of such injury or damage. All claims made by the Contractor under this Agreement are subject to the limitations set forth in Paragraph 33.7 herein.

21.5 PERFORMANCE BOND AND LABOR AND MATERIALS PAYMENT BOND. The Contractor shall furnish performance and labor and materials payment bonds covering the faithful performance of the Agreement and the payment of all obligations arising there under in such form and amount as the Owner may prescribe and with such sureties as may be agreeable to the Owner. The premiums shall be paid by the Contractor. The Contractor shall, prior to commencement of the Work, submit such bonds to the Owner.

21.6 OWNER'S RIGHT TO COMPLETE THE WORK. If the Contractor defaults or neglects to carry out the Work in accordance with the Contract Documents, or fails to perform any provision of the Agreement, the Owner may, after seven (7) days written notice to the Contractor and his surety, and without prejudice to any other remedy he may have, proceed

to make such other necessary and reasonable arrangements to carry out the Work in accordance with the Contract Documents, all at the expense of the Contractor, including the attorneys' fees and other costs incurred by Owner.

21.7 ROYALTIES AND PATENTS. The Contractor shall pay all royalties and license fees and shall defend all suits or claims from infringement of any patent right and shall save the Owner harmless from loss of account thereof, including Owner's attorneys' fees and court costs, except that Owner shall be responsible for all such loss when a particular design, process or product of a particular manufacturer or manufacturers is specified. But, if the Contractor has reason to believe that the design, process or products specified is an infringement of a patent, he shall be responsible for such loss unless he promptly gives information to the Project Administrator prior to starting the Work.

21.8 LEGAL FEES AND COSTS. The party substantially prevailing shall be entitled to recover its attorneys' fees, any costs of suit, any expert witness fees and the actual cost of any test or inspection incurred in connection with any effort undertaken to enforce any of the terms of this Agreement.

21.9 SEVERABILITY. In the event any provision in this Agreement is held invalid by any court of competent jurisdiction, the remaining provisions in this Agreement shall be deemed severable and shall remain in full force and effect.

21.10 CONTRACT AMOUNT. The Contract Amount is as stated in the Agreement and General Conditions and is the total amount payable by the Owner to the Contractor for the performance of the Work under the Contract Documents, subject to credits or increases resulting from Change Orders. In no event shall Owner be responsible for more than the Contract Amount.

21.11 CANCELLATION FOR CONFLICT. Pursuant to A.R.S. § 38-511, Owner reserves the right to cancel this Agreement, within three years after the effective date of this Agreement, without penalty or further obligation, if any person significantly involved in initiating, negotiating, securing, drafting or creating the Agreement on behalf of Owner is, at any time while this Agreement or any extension of this Agreement is in effect, an employee or agent of Contractor in any capacity or a sub-contractor to Contractor with respect to the subject matter of this Agreement. Cancellation under this section by Owner shall be effective when written notice from the City Manager is received by Contractor. The Owner may recoup any fee or commission paid or due to any person significantly involved in initiating, negotiating, securing, drafting or creating the Agreement on behalf of the Owner from Contractor arising as the result of the Agreement.

21.12 NO ISRAEL BOYCOTT CERTIFICATION. Pursuant to A.R.S. § 35-393.01, the Contractor certifies that it is not currently engaged in, and for the duration of this Agreement will not engage in, the boycott of any goods or services from the state of Israel.

ARTICLE 22
TESTS

22.1 Where the Contract Documents, laws, ordinances, rules, regulations or orders of any public authority having jurisdiction require any of the Work to be inspected, tested or approved, the Contractor shall give the Project Administrator timely notice of its readiness and of the date arranged so the Project Administrator may observe such inspection, testing or approval.

22.2 The Contractor shall be responsible that all equipment and materials used in the construction of the Project, especially those upon which the strength and durability of the structure may depend, shall be subject to adequate inspection and testing in accordance with accepted standards to establish conformity with Specifications, applicable codes and standards and suitability for use intended.

22.3 If after the commencement of the Work the Project Administrator determines that any of the Work requires special inspection, testing, or approval, which subparagraph 22.1 does not include, he will order such special inspection, testing or approval, and the Contractor shall give notice of readiness as in Subparagraph 22.1.

22.4 If such special inspection or testing reveals a failure of the Work to comply:
a. With the requirements of the Contract Documents, or
b. With respect to the performance of the Work, with laws, ordinances, rules regulations or orders of any public authority having jurisdiction over the Work,
then the Contractor shall bear all costs thereof, including any additional professional services made necessary by such failure, and the costs of such inspection or testing; otherwise the Owner shall bear such costs of special inspection.

22.5 Required certificates of re-inspections or testing to secure compliance with this article shall be paid for by the Contractor.

22.6 If the Project Administrator wishes to observe the inspections, tests or approvals required by this article, he will do so promptly and, where appropriate, at the source of supply.

22.7 Neither the observations of the Project Administrator in his administration of the Agreement, nor inspections, tests or approvals by person other than the Contractor shall relieve the Contractor from his obligations to perform the Work in accordance with the Contract Documents.

ARTICLE 23
TIME AND LIQUIDATED DAMAGES

23.1 It is understood and agreed that the construction of the Work under the Contract Documents shall be commenced on the date stated in the Notice to Proceed issued by the Project Administrator and shall be completed by the Contractor within the number of calendar days specified in Article 2 of the Agreement (the "Finish Date").

23.1.1 The Contract Time is the period of time specified in Article 2 running from (1) the date specified in the Notice to Proceed as the date upon which the Contractor is to commence the Work (the "Start Date"), through (2) the Finish Date.

23.1.2 The date of beginning, rate of progress, and time for completion are essential conditions of the Agreement, and the Contractor agrees that said Work shall be prosecuted regularly, diligently, and uninterruptedly as such rate of progress as will insure full completion thereof within the Contract Time specified. It is expressly agreed that the Contract Time is reasonable.

23.2 If the Final Completion Date as defined in Subparagraph 23.4 occurs after the expiration of the Contract Time, the Contractor shall pay the Owner the sum specified in Article 3 of the Agreement as liquidated damages for each calendar day the Work remains incomplete after expiration of the Contract Time. This amount is agreed upon because of the impracticability and extreme difficulty of ascertaining the actual damages the Owner would sustain. It is expressly agreed that the amount of liquidated damages set forth herein is reasonable. Said amounts may be retained from time to time by the Owner from payments due the Contractor.

23.3 The date of Completion of the Work, or designated portion thereof, is the date certified in writing by the Project Administrator when construction is sufficiently complete, in accordance with the Contract Documents as they may have been modified by any Change Orders agreed to by the parties, so that the Owner may occupy the project, or a designated portion thereof, if he so elects, for the use for which it is intended. Certification of a designated portion of the Work by the Project Administrator as being "Complete" and occupancy of that portion thereafter by the Owner shall neither release, or otherwise operate to excuse, the Contractor from his duty to complete the remainder of the Work within the Contract Time nor relieve the Contractor from any liability for not completing the remainder of Work within the Contract Time including liability for liquidated damages.

23.4 The Final Completion Date is the calendar date when all items of the Work are one hundred percent (100%) finished, with no items of any scope, large or small, outstanding and remaining to be constructed, and all known defective work has been corrected. When the Project Administrator certifies in writing, pursuant to the terms of article 29 that the Final Completion Date is reached and it is approved by the Owner, the Contractor may make application for final payment pursuant to Article 29.

23.5 In any case where the terms of any other provision of the Agreement may be construed to be in conflict with any term regarding time for completion of the Project, interpretation of the conflicting terms which gives precedence to the term regarding time for completion shall govern.

ARTICLE 24
PROGRESS AND COMPLETION

24.1 All time limits stated in the Contract Documents are of the essence of the Agreement.

24.2 The Contractor shall begin the Work on the Start Date as defined in Subparagraph 23.1.1 and shall carry the Work forward expeditiously, uninterruptedly and with adequate forces and shall complete it within the Contract Time.

ARTICLE 25

DELAYS AND EXTENSION OF TIME

25.1 If the Contractor is delayed at any time in the progress of the Work by any cause which the Owner determines may justify the delay, including, but not limited to, acts of God, acts of the public enemy, acts of the Owner, acts of another contract in performance of a contract with the Owner, fires, floods, epidemics, quarantine restriction, freight embargoes and adverse weather detrimental to completion of the Work and, in the aggregate, materially different than weather normally experienced during the entire Contract Time, then the Contract Time shall be extended by Change Order for such reasonable time as the Owner may determine. No extension of the Contract Time pursuant to this paragraph shall be limited to granting a time extension to the Contractor, and there is no other obligation, express or implied, on the part of the Owner to the Contractor for delay from any cause.

25.2 All claims for extension of time shall be made in writing to the Project Administrator no more than fourteen (14) days after the occurrence of the delay; otherwise, they shall be waived. In the case of a continuing cause of delay, only one claim is necessary. The Contractor shall promptly notify the Project Administrator in writing of the date of the termination of the continuing cause of delay.

25.3 If no schedule or agreement is made stating the dates upon which written interpretations as set forth in Subparagraph 1.2.5 shall be furnished, then no claim for delay shall be allowed on account of failure to furnish such interpretations until fifteen (15) days after demand is made for them, and not then unless such claim is reasonable.

ARTICLE 26
PROGRESS PAYMENTS

26.1 On or about the twenty-fifth day of each calendar month during the course of construction, the Contractor shall submit to the Project Administrator an itemized Application for Payment supported by such data substantiating the Contractor's right to payment as the Project Administrator may require. Contractor shall also submit a release of claim and lien waiver covering all work performed to date, including the work of each Subcontractor and material supplier.

26.2 Payments shall be based on the Work actually performed during the preceding calendar month. Payment may be made for materials not incorporated in the Work but delivered and suitably stored at the site, or at some other location under such conditions agreed upon in writing by the Project Administrator to be transported to the site and installed at a later date.

26.3 Material delivered and suitably stored at the site, or at some other agreed upon location by the Contractor, subcontractors, sub-subcontractors, or material suppliers shall remain the responsibility of the Contractor until incorporated into the Work, shall be insured for the benefit of the Owner to the full value of the material and shall be suitably stored and protected. Only such material that is in accordance with the Contract Documents shall be installed into the Work. Until the final completion and acceptance of the Work by the Owner, it shall be the Contractor's responsibility to protect all materials to be installed in or delivered to the Project.

26.4 The Contractor warrants and guarantees that title for all work, materials and equipment covered by an Application for Payment shall pass to the Owner either by incorporation in the Project or upon receipt of payment by the Contractor, whichever occurs first and that such work, materials and equipment shall be free and clear of all liens, claims, security interests or encumbrances, hereinafter referred to in this article as "claims".

26.5 Within 10 days after receiving the Notice to Proceed, Contractor shall provide a preliminary schedule of values for all of the Work which includes quantities and prices of work which when added together equal the Contract amount and subdivides the Work into component parts in sufficient detail to serve as the basis of progress payments during performance of the Work. Such prices shall include an appropriate amount of overhead and profit applicable to each item of Work.

ARTICLE 27
APPROVALS FOR PAYMENT

27.1 If the Contractor has made application for payment pursuant to Article 26, then not later than seven (7) days after the date of submission, the Project Administrator shall issue his approval of the Application for Payment and forward his approval of the Application for such amount as he determines to be properly due, or state in writing his reasons for withholding, in whole or in part, the amount applied for as provided in article 28.

27.2 After the Project Administrator has approved an Application for Payment and has forwarded this approval, Owner shall thereafter promptly issue payment to Contractor.

27.2.1 Payment will be based on ninety percent (90%) of the value of the Work actually performed during the preceding calendar month and approved by Project Administrator until the Work is fifty percent (50%) completed.

27.2.2 If the Contractor is making satisfactory progress when the Work is fifty (50%) completed, the Contractor shall be entitled to a reduction in the retention amount, as required by ARS § 34-221(C).

27.2.3 Any amounts retained by Owner shall be paid to the Contractor, as previously specified, after the Final Completion Date, provided the Contractor has by that time duly furnished the Owner consent of surety, lien waivers, any and all operating manuals, wiring diagrams, control diagrams, maintenance manuals, equipment and appliance warranties, record drawings, warranties and other documents of any nature called for in the Contract Documents or required for the proper functioning of the Work as a whole and has otherwise performed all of Contractors' obligations under the Contract Documents. In lieu of this retention, the Contractor may provide alternative security in the manner authorized by law.

27.3 In the Application for Payment, or in a separate notice, the Contractor shall include and itemize, and furnish such supporting particulars as the Project Administrator shall require, all claims for additional compensation against the Owner arising under the Contract Documents or any covenant thereof, express or implied, or from any cause whatsoever, within the time limits prescribed in Subparagraph 33.7. It is expressly covenanted that the purpose of this provision is to guard the Owner against surprise claims and to permit the

Owner to investigate claims as the same may arise. It is expressly covenanted that the Owner shall have no liability on any claim unless such claim was approved by the Project Administrator and was submitted in writing at the time and in the manner required hereby.

27.4 No certificate for a progress payment, nor any progress payment, nor any partial or entire use or occupancy of the Project by the Owner, shall constitute an acceptance of any Work not in accordance with the Contract Documents.

ARTICLE 28
PAYMENT WITHHELD

28.1 The Project Administrator or Owner may decline to approve an Application for Payment and the Project Administrator may withhold his Certificate in whole or in part if in his opinion he is unable to certify the work for which payment is requested has been performed. The Project Administrator may also decline to approve any Applications for Payment or, because of subsequently discovered evidence or subsequent inspections, he may nullify the whole or any part of any Certificate for Payment previously issued to such extent as may be necessary in his opinion to protect the Owner from loss because of:

1. Defective work not remedied,
2. Claims filed or reasonable evidence indicating probable filing of claims,
3. Reasonable doubt that the Work can be completed for the unpaid balance of the Contract Amount,
4. Damage to another contractor,
5. Reasonable indication that the Work will not be completed within the Contract Time, or
6. Unsatisfactory prosecution of the Work by the Contractor or other material breach of this Agreement.
7. Failure to complete all Labor Standards requirements

28.2 When the above grounds are removed or in the case of Subparagraph 28.1.3 above, when the Owner is satisfied that the Contractor will complete the Project at the agreed upon price, payment shall be made for amounts withheld because of them.

ARTICLE 29
COMPLETION AND FINAL PAYMENT

29.1 Upon receipt of written notice that the Work is ready for final inspection and acceptance, the Project Administrator will promptly make such inspection and, when the Project Administrator finds (1) the Work in accordance with and acceptable under the Contract Documents, (2) the Work completed under the Agreement fully performed and (3) the Final Completion Date has been reached, then, and only then, the Project Administrator shall promptly certify in writing that, to the best of his knowledge, information and belief, and on the basis of observations and inspections, the Work has been fully completed in accordance with the terms and conditions of the Contract Documents, that the entire balance found to be due the Contractor is payable. The Project Administrator's written notice required by this paragraph shall state the Date of Final Completion.

29.2 The making of final payment shall constitute a waiver of all claims by the Owner except those arising from:

1. Unsettled claims,
2. Faulty or defective Work,
3. Failure of the Work to comply with the requirements of the Contract Documents, or
4. Terms of any guarantees required by the Contract Documents.

29.3 The acceptance of final payment shall constitute a waiver of all claims by the Contractor.

29.4 No earlier than three weeks before the expiration of the warranty period for the Work specified in Article 36 herein, or at such other additional earlier time or times as the Owner may agree, the Project Administrator, in company with the Contractor, shall make an inspection of the Project and certify that all defects in material and workmanship occurring during this period have been satisfactorily corrected.

ARTICLE 30
PROTECTION OF PERSONS AND PROPERTY

30.1 The Contractor shall be responsible for initiating, maintaining and supervising all safety precautions and programs in connection with the Work in compliance with all local, state and federal laws and regulations.

30.2 The Contractor shall take all reasonable precautions for the safety of, and shall provide all reasonable protection to prevent damage, injury or loss, to:

1. All employees engaged in the Work and all other persons who may be affected thereby;
2. All the Work and all materials and equipment to be incorporated therein, whether in storage on or off the site, under the care, custody or control of the Contractor or any of his Subcontractors or Sub-subcontractors; and
3. Other property at the site or adjacent thereto, including trees, shrubs, lawns, walks, pavements, roadways, structures and utilities not designated for removal, relocation or replacement in the course of construction.

30.3 The Contractor shall comply with all applicable laws, ordinances, rules, regulations and orders of any public authority having jurisdiction for the safety of persons or property or to protect them from damage, injury or loss. He shall erect and maintain, as required by existing conditions and the progress of the Work, all reasonable safeguards for safety and protection, including, but not limited to, posting danger signs and other warnings against hazards, promulgating safety regulations and notifying owners and users of adjacent utilities and property.

30.4 When the use or storage of explosives or other hazardous materials or equipment is necessary for the execution of the Work, the Contractor shall exercise the utmost care and shall carry on such activities under the supervision of properly qualified personnel.

30.5 All damage or loss to any property caused in whole or in part by the Contractor, any Subcontractor, any Sub-subcontractor, or anyone directly or indirectly employed by any of them, or by anyone for whose acts any of them may be liable, shall be remedied by the Contractor, except damage or loss attributable to faulty Drawings or Specifications or the acts or omissions of the Owner or Public Works Director, or designee, if any, or anyone employed by either of them or for whose acts either of them may be liable, and not attributable to the fault or negligence of the Contractor.

30.6 The Contractor shall designate a responsible member of his organization at the site whose duty shall be the prevention of accidents. This person shall be the Contractor's Superintendent unless otherwise designated in writing by the Contractor.

30.7 The Contractor shall not load or permit any part of the Work to be loaded so as to endanger its safety.

30.8 **EMERGENCIES.** In any emergency affecting the safety of persons or property, the Contractor shall act to prevent threatened damage, injury or loss. Any additional compensation or extension of time claimed by the Contractor on account of emergency work shall be determined as provided by the applicable provision of the Contract Documents.

ARTICLE 31
INSURANCE: GENERAL

31.1 The Contractor at Contractor's own expense shall purchase and maintain the herein stipulated minimum insurance with companies duly licensed, possessing a current A.M. Best, Inc. Rate of A10, or approved by Owner in its sole discretion and licensed to do business in the State of Arizona with policies and forms satisfactory to the Owner.

31.2 All insurance required herein shall be maintained in full force and effect until all work or service required to be performed under the terms of the Agreement is satisfactorily completed and formally accepted; failure to do so may, at the sole discretion of the Owner, constitute a material breach of this Agreement.

31.3 The Contractor's insurance shall be primary insurance as respects the Owner**,** and any insurance or self-insurance maintained by the Owner shall not contribute to it.

31.4 Any failure to comply with the claim reporting provisions of the insurance policies or any breach of an insurance policy warranty shall not affect coverage afforded under the insurance policies to protect the Owner.

31.5 The insurance policies, except Workers' Compensation, shall contain a waiver of transfer rights of recovery (subrogation) against the Owner, its agents, officers, officials and employees for any claims arising out of the Contractor's acts, errors, mistakes, omissions, work or service.

31.6 The insurance policies may provide coverage which contains deductible or self-insured retentions. Such deductible and/or self-insured retentions shall not be applicable with

respect to the coverage provided to the Owner under such policies. The Contractor shall be solely responsible for the deductible and/or insured retention and the Owner, at its option, may require the Contractor to secure payment of such deductibles or self-insured retentions by a Surety Bond or an irrevocable and unconditional letter of credit.

31.7 The Owner reserves the right to request and to receive, within ten (10) working days, certified copies of any or all of the herein required insurance policies and/or endorsements. The Owner shall not be obligated, however, to review same or to advise Contractor of any deficiencies in such policies and endorsements, and such receipt shall not relieve Contractor from, or be deemed a waiver of, the Owner's rights to insist on strict fulfillment of Contractor's obligations under this Agreement.

31.8 The insurance policies, except Workers' Compensation and Professional Liability, required by this Agreement, shall name the Owner, it agents, officers, officials and employees as Additional Insured.

31.9 CERTIFICATES OF INSURANCE

31.9.1 Prior to commencing work or services under this Agreement**,** Contractor shall furnish the Owner with Certificates of Insurance, or formal endorsements as required by the Agreement, issued by Contractor's insurer(s), as evidence that policies providing the required coverages, conditions and limits required by the Agreement are in full force and effect.

31.9.2 In the event any insurance policy(ies) required by this Agreement, is(are) written on a "claims made" basis, coverage shall extend for two years past completion and acceptance of the Contractor's work or services and as evidenced by annual Certificates of Insurance.

31.9.3 If a policy does expire during the life of the Agreement, a renewal certificate must be sent to the Owner fifteen (15) days prior to the expiration date.

31.10 CANCELLATION AND EXPIRATION NOTICE. Insurance required herein shall not expire, be cancelled, or materially changed without thirty (30) days prior written notice to the Owner.

ARTICLE 32
INSURANCE: REQUIRED COVERAGE

32.1 COMMERCIAL GENERAL LIABILITY

32.1.1 Contractor shall maintain Commercial General Liability insurance with a unimpaired limit of not **less than $2,000,000.00 for each occurrence with a $2,000,000.00 Products/Completed Operations Aggregate** and a **$2,000,000.00 General Aggregate Limit**. The policy shall include coverage for bodily injury, broad form property damage, personal injury, products and completed operations and blanket contractual coverage including, but not limited to, the liability assumed under the indemnification provisions of this Agreement which coverage will be at least as broad as

Insurance Service Office, Inc. Policy Form CG 0001 or any replacements thereof. The coverage shall not exclude X, C, U.

32.1.2 Such policy shall contain a severability of interest provision, and shall not contain a sunset provision or commutation clause, or any provision which would serve to limit third party action over claims.

32.1.3 The Commercial General Liability additional insured endorsement shall be at least as broad as the Insurance Service Office, Inc., Additional Insured, Form B, CG 20101185, and shall include coverage for Contractor's operations and products and completed operations.

32.1.4 If required by this Agreement, the Contractor subletting any part of the work, services or operations awarded to the Contractor shall purchase and maintain, at all times during prosecution of the work, services or operations under this Agreement, an Owner and Contractor's Protective Liability insurance policy for bodily injury and property damage, including death, which may arise in the prosecution of this Contractor's work, service or operations under this Agreement. Coverage shall be on an occurrence basis with **a limit not less than $1,000,000.00 per occurrence**, and the policy shall be issued by the same insurance company that issues the Contractor's Commercial General Liability insurance.

32.2 AUTOMOBILE LIABILITY

32.2.1 Contractor shall maintain Commercial/Business Automobile Liability insurance with a combined single limit for bodily injury and property damage of **not less than $2,000,000.00 each occurrence** with respect to the Contractor's any owned, hired, and non-owned vehicles assigned to or used in performance of the Contractor's work. Coverage will be at least as broad as coverage code 1, "any auto", (Insurance Service Office, Inc. Policy Form CA 0001, or any replacements thereof). Such insurance shall include coverage for loading and off loading hazards.

32.2.2 If hazardous substances, materials or wastes are to be transported, MCS 90 endorsement shall be included and **$5,000,000.00 per accident limits for bodily injury and property damage** shall apply.

32.3 WORKER'S COMPENSATION

32.3.1 The Contractor shall carry Workers' Compensation insurance to cover obligations imposed by federal and state statutes having jurisdiction of Contractor's employees engaged in the performance of the work or services; and, Employer's Liability insurance of **not less than the statutory limits.**

32.3.2 In case any work is sub-contracted, the Contractor will require the Subcontractor to provide Workers' Compensation and Employer's Liability to at least the same extent as required of the Contractor.

THE CITY SHOULD CONSIDER BUILDER'S RISK INSURANCE

ARTICLE 33
CHANGES IN THE WORK AND CLAIMS

33.1 CHANGE ORDERS

33.1.1 The Owner, without invalidating the Agreement, may order changes in the Work within the general scope of the Agreement consisting of additions, deletions or other revisions. The Contract Amount and/or the Contract Time shall be adjusted pursuant to the terms of the Contract Documents.

33.1.2 A Change Order is a written amendment to the Contract Documents signed by the Owner and the Contractor, issued after the execution of the Agreement, authorizing a Change in the Work or an adjustment in the Contract Amount or the Contract Time. The Contract amount and the Contract Time may be changed only by Change Order.

33.1.3 The cost or credit, as the case may be, to the Owner resulting from a Change in the Work shall be determined in one or more of the following ways as mutually agreed:

1. By a lump sum properly itemized in a form acceptable to Owner including sufficient supporting substantiating data to permit evaluation.
2. By actual cost plus a negotiated percentage for profit, not to exceed twenty percent.
3. Unit price as stated in the Agreement, subject to the provisions of Subparagraph 33.3 herein. Unit prices proposed on the bid form and included in the Agreement are not subject to further overhead and profit adjustments. The Contract sum will be adjusted by the direct extension of the number of units and unit price.

33.2 If none of the methods set forth in Subparagraph 33.1.3 is agreed upon to calculate a charge or credit to Owner, the Contractor, provided he otherwise receives a Change Order, shall promptly proceed with the Work involved. The cost of such Work shall then be estimated in good faith by the Project Administrator on the basis of the Contractor's reasonable expenditures and savings. The Project Administrator shall use the unit price basis if available and, if not, then the actual cost basis for this determination. The Project Administrator shall then submit that estimate, with all supporting information, for approval by the Public Works Director. In such case, and also under Subparagraph 33.1.3.1 above, the Contractor shall keep and present, in such form as the Project Administrator may prescribe, an itemized accounting together with appropriate supporting data. The amount of credit to be allowed by the Contractor to the Owner for any deletion or change which results in a net decrease in cost will be the amount of the actual net decrease.

33.3 If unit prices are stated in the Contract Documents or subsequently agreed upon, and if the quantities originally contemplated are so changed in proposed Change Order that application of the agreed unit prices to the quantities or Work proposed will create a hardship on the Owner or the Contractor, the applicable unit prices shall be equitably adjusted to prevent such hardship.

33.4 If the Contractor claims that additional cost or time is involved because of:

1. Any written interpretation issued pursuant to Paragraph 1.2.5,
2. Any order by the Project Administrator to stop the Work where the Contractor was not at fault, or
3. Any written order for a minor change in the Work issued pursuant to Paragraph 33.8,

the Contractor shall make such claim as provided in Paragraph 33.7.

33.5 IMPACT COSTS. No claim for impact costs resulting from performance of a Change Order will be permitted against the Owner, any engineer or any other party in privity of contract with the Owner with respect to the project subsequent to the time that the Change Order is signed by the Contractor.

33.6 FINAL SETTLEMENT. Agreement on any Change Order shall constitute a final settlement of all matters relating to the change in the Work which is the subject of the Change Order, including, but not limited to, all direct and indirect costs associated with such change, any impact such change may have on the unchanged Work, and any and all adjustments to the Contract Sum or the Contract Time. In the event a Change Order increases the Contract Sum, the Contractor shall include the Work covered by such Change Orders in Application for Payment as if such Work were originally part of the Contract or in separate notice as provided in Paragraph 27.3. Agreement on any Change Order releases the Owner, and any other party in privacy of Contract with the Owner with respect to the Project from all claims or liabilities arising in any way in the connection with, or in any way associated with, such change.

33.7 CLAIMS FOR ADDITIONAL COST OR TIME. If the Contractor is entitled, under the terms of the Agreement, to make a claim for an increase in the Contract Amount or any other claim, he shall give the Project Administrator written notice thereof within fourteen (14) days after the occurrence of the event giving rise to such claim or include such notice in the Application for Payment for the month in which the event giving rise to the claim occurred, whichever is earlier. Any notice other than one made for an extension of the Contract Time shall be given by the Contractor before proceeding to execute the Work which is the subject matter of the claim, except in an emergency endangering life or property, in which case the Contractor shall proceed in accordance with Paragraph 27.3 within the time limits prescribed herein and no such claim shall be valid unless so made. Any change in the Contract Amount or Contract Time resulting from such claim to be effective shall be approved by the Owner and authorized by Change Order.

33.8 MINOR CHANGES IN THE WORK. The Project Administrator shall have authority to order minor changes in the Work not involving an adjustment in the Contract Amount or an extension of the Contract Time and not inconsistent with the intent of the Contract Documents.

33.9 FIELD ORDERS. The Project Administrator may issue written Field Orders which interpret the Contract Documents or which order minor changes in the Work in accordance with

Paragraph 33.8 without change in Contract Amount or Contract Time. The Contractor shall carry out such Field Orders promptly.

ARTICLE 34
UNCOVERING AND CORRECTION OF WORK

34.1 UNCOVERING OF WORK. If any Work should be covered contrary to the request of the Project Administrator, it must, if required by the Project Administrator, be uncovered for his observation and replaced all at the Contractor's expense.

34.2 If any other Work has been covered which the Project Administrator has not requested to observe prior to being covered, the Project Administrator may request to see such Work and it shall be uncovered by the Contractor.
34.2.1 If such Work is found to be in accordance with the Contract Documents, the cost of uncovering and replacement after approval by the Owner shall, by appropriate Change Order, be charged to the Owner.
34.2.2 If such Work is found not to be in accordance with the Contract Documents, the Contractor shall pay such costs unless it is found that this condition was caused by a separate contractor, and in that event the Owner shall be responsible for the payment of such costs.

34.3 CORRECTION OF WORK. The Contractor shall promptly correct all Work rejected by the Project Administrator as defective or as failing to conform to the Contract Documents whether observed before or after Final Completion and whether or not fabricated, installed or completed. The Contractor shall bear all costs of correcting such rejected Work, including the cost of any additional professional or testing services thereby made necessary.

34.3.1 If, within the time provided in Article 36 herein or within such longer period of time as may be prescribed by law or by the terms of any applicable special guarantee required by the Contract Documents, including the original conformance with the Contractor Documents, any of the Work is found to be defective or not in accordance with the Contract Documents, the Contractor shall, at his sole expense, correct it promptly after receipt of a written notice from the Owner to do so. The Owner shall give such notice promptly after discovery of the condition.
34.3.2 All such defective or non-conforming Work shall be removed from the site where necessary, and the Work shall be corrected to comply with the Contract Documents without cost to the Owner.
34.3.3 The Contractor shall bear the cost of making good all work of separate contractors destroyed or damaged by such removal or correction.

34.4 If the Contractor does not remove such defective or non-conforming Work within a reasonable time fixed by written notice from the Project Administrator, the Owner may remove it and may store the materials or equipment at the expense of the Contractor.

34.4.1 If the Contractor does not pay the cost of such removal and storage within ten (10) days after receipt of a statement of charges therefore, the Owner may, upon ten (10) additional days written notice, sell such Work at auction or at private sale and shall account

for the net proceeds thereof after deducting all the costs that should have been borne by the Contractor, including compensation for additional services and any attorneys, fees incurred by Owner in connection therewith.

34.4.2 If such proceeds of sale do not cover all costs that the Contractor should have borne, the difference shall be charged to the Contractor and an appropriate Change Order shall be issued. If the payments then or thereafter due the Contractor are not sufficient to cover such amount, the Contractor shall pay the difference to the Owner, and all attorneys, fees and other costs that the Owner may incur in collecting same.

34.5 If the Contractor fails to correct such defective or non-conforming work, the Owner may correct it, assessing all costs to do so to Contractor.

34.6 The obligations of the Contractor under this article shall be in addition to and not in limitation of any obligations imposed upon him by special guarantees required by the Contract Documents or otherwise prescribed by law.

34.7 ACCEPTANCE OF DEFECTIVE OR NON-CONFORMING WORK. If the Owner prefers to accept defective or non-conforming Work, he may do so instead of requiring its removal and correction, in which case a Change Order will be issued to reflect an appropriate reduction in the Contract Amount, or, if the amount is determined after final payment, it shall be paid by the Contractor.

ARTICLE 35
TERMINATION OF THE AGREEMENT

35.1 TERMINATION BY THE CONTRACTOR. If the work is stopped for a period of sixty (60) days, and the Owner is immediately notified of such stopping, under an order of any court or other public authority having jurisdiction through no act or fault of the Contractor or any Subcontractor or their agents or employees or any other persons performing any of the Work under a contract with the Contractor, and by reason of some act or omission of Owner, then the Contractor may, upon seven day's written notice to the Owner and the Project Administrator/Engineer as its sole remedy hereunder, terminate the Agreement and recover from the Owner payment for all Work approved by Owner and for any proven loss sustained upon any materials for Work accomplished through the date the notice of termination is given and approved and accepted by Owner.

35.2 TERMINATION BY THE OWNER. If, through any cause, the Contractor shall fail to fulfill in a timely and proper manner the Contractor’s obligations under this Contract, or if the Contractor shall violate any of the covenants, agreements, or stipulations of the Agreement, the Owner shall thereupon have the right to terminate this Agreement by giving written notice to the Contractor of such termination and specifying the effective date thereof, at least five (5) days before the effective date of such termination. In such event, all finished or unfinished documents, data, studies, surveys, drawings, maps, models, photographs and reports prepared by the Contractor under this Agreement shall, at the option of the Owner, become its property and the Contractor shall be entitled to receive just and equitable compensation for any work satisfactorily completed hereunder.

35.2.1 Notwithstanding the above, the Contractor shall not be relieved of liability to the Owner for damages sustained by the Owner by virtue of any breach of the Agreement by the Contractor, and the Owner may withhold any payments to the Contractor for the purpose of set-off until such time as the exact amount of damages due the Owner from the Contractor is determined.

35.2.2 The Owner may terminate this Agreement at any time by giving at least Ten (10) days notice in writing to the Contractor. If the Agreement is terminated by the Owner, the Contractor will be paid for the time provided and expenses incurred up to the termination date. If this Agreement is terminated due to the fault of the Contractor, the aforementioned clause relative to termination shall apply.

35.2.3 If the Contractor refuses or fails, except in cases for which extension of time is provided, to supply enough properly skilled workmen or sufficient and proper materials to complete the Work in accord with the Progress Schedule and Contract Time, or he fails to make prompt payments to Subcontractors or for materials or labor, or disregards laws, ordinances, rules, regulations or orders of any public authority having jurisdiction, or fails to uninterruptedly complete the Work once he has the Notice to Proceed, or otherwise is guilty of a material breach of any provision of the Contract Documents, then the Owner may, without prejudice to any other right or remedy and after giving the Contractor and his surety seven (7) days written notice, terminate the employment of the Contractor and take possession of the site and all materials, and may finish the Work by whatever method he may deem expedient.

35.2.3.1 In such case, the Contractor shall not be entitled to receive any further payment until the Work is finished. Termination of the Agreement under this Paragraph shall not relieve the Contractor of any warranty obligations on Work performed hereunder, and such obligations shall survive termination of this Agreement.

35.2.3.2 If the unpaid balance of the Contract Amount is exceeded by the costs of finishing the Work, including compensation for additional services, attorneys' fees and all other costs incurred by Owner in completion of the Contractor's obligations, the Contractor shall pay the difference to the Owner. The costs incurred by the Owner as herein provided shall be certified by an engineer.

ARTICLE 36
WARRANTY AND SITE CONDITIONS

36.1 TWO-YEAR WARRANTY. The Contractor shall warrant all Work under this Agreement to be in accordance with the Contract Documents against defects of material and workmanship for a period of two years from the date of Final Completion; provided, however, that those items of the Work specified as having longer warranties shall be warranted for the period specified.

36.2 The Contractor shall be responsible for the total cost of repairing and restoring any Work found not in compliance with the Contract Documents or any defective Work to a new condition, at no cost to Owner.

36.3 In any case where the subject matter of the non-compliance or defect relates to Work done under a subcontract between the Contractor and any subcontractor, it is the responsibility of the Contractor, not the Owner, to secure the Subcontractor's performance in compliance with this paragraph and, in the event of the Subcontractor's failure or refusal within a reasonable time to perform after notice, it shall be the Contractor's responsibility to repair and restore such non-complying or defective Work to a new condition, at no cost to Owner.

36.4 In any case where the failure in complying or defective Work has been brought to the attention of the Contractor by the Owner and the Contractor fails or refuses to correct it within five (5) days of such notice, the Owner may elect, without precluding any other remedy it may have available to it, to have the defective Work repaired and restored to a new condition in whatever reasonable manner it deems appropriate, regardless of the cost, and the Contractor shall be liable to the Owner for the total cost thereof, including, by way of example only, any engineering and legal fees related to effecting the repair, plus 10% of the total costs incurred.

36.5 Material and workmanship made good through compliance with such warranty shall be subject to the same warranty period as the original materials and workmanship. Such warranty period shall begin on the date the replaced material and work is certified as acceptable in writing by the Project Administrator.

ARTICLE 37
PRECONSTRUCTION CONFERENCE

37.1 Before any Work at the Site is started, a conference attended by Owner, Contractor and others as appropriate will be held to establish a working understanding among the parties as to the Work, procedure for handling shop drawings and other submittals, processing Applications for Payment, electronic or digital transmittals, and maintaining required records.

ARTICLE 38
ELECTRONIC TRANSMITTALS

38.1 Except as otherwise stated elsewhere in the Agreement, the Owner and Contractor may transmit, and shall accept, Project related correspondence, text, data, documents, drawings, information, and graphics, including but not limited to Shop Drawings and other submittals in electronic media or digital format, either directly, or through access to a secure Project website.

38.2 If the Agreement does not establish protocols for electronic or digital transmittals, then Owner and Contractor shall jointly develop protocols.

38.3 When transmitting items in electronic media or digital format, the transmitting party makes no representations as to long term compatibility, usability, or readability of the items resulting from the recipient’s use of software application packages, operating systems, or compute hardware that may differ from those used in the drafting or transmitting of the items, or from those established in applicable transmittal protocols.

SECTION B

GENERAL CONDITIONS

CITY OF NOGALES

ROYAL ROAD WATER MAIN REPLACEMENT

The Pima Association of Governments (PAG) Standard Specifications and Details for Public Improvements shall be modified and amended as follows:

SECTION 104 - SCOPE OF WORK

104-2 Alterations of Contract is revised to read:

(A) Significant Changes in the Character of Work:

(1) The Public Works Director, or designee reserves the right to make, in writing, at any time during the work, such changes in quantities and such alterations in the work as are necessary to satisfactorily complete the project. Such changes in quantities and alterations shall not invalidate the contract nor release the surety, and the Contractor agrees to perform the work as altered.

When the Agency makes alterations in the details of construction or Specifications, that are limited in scope, to the extent that the cost of the alterations will not exceed $10,000.00, the Public Works Director, or designee and the Contractor may reach agreement upon the scope of work and an amount to cover the cost of the work to be performed. This agreement shall be reflected in a letter from the Public Works Director, or designee to the Contractor, which, when executed by both parties, shall have the same force and effect as a supplemental agreement. Work shall not proceed until both parties have signed the agreement. This work will be paid for under Section 924 - Miscellaneous Work (Minor Alterations in Details of Construction), which shall serve as an account for the payment of letter agreements in accordance with this specification. Any balance left in this account at the end of the construction phase will not be paid and will be expunged from the contract.

(2) If the alterations or changes in quantities significantly change the character of the work under the contract, whether such alterations or changes are in themselves significant changes to the character of the work or, by affecting other work, cause such other work to become significantly different in character, an adjustment, excluding anticipated profits, will be made to the contract. The basis for the adjustment shall be agreed upon prior to the performance of the work. If a basis cannot be agreed upon, then an adjustment will be made either for or against the contractor in such amount as the Public Works Director, or designee may determine to be fair and equitable.

(3) If the alterations or changes in quantities do not significantly change the character of the work to be performed under the contract, the altered work will be paid for as provided elsewhere in the contract.

(4) The term "significant change" shall be construed to apply only to the following circumstances:

(a) When the character of the work as altered differs materially in kind or nature from that involved or included in the original proposed construction or

When a major item of work, as defined elsewhere in the contract, is increased in excess of 125 percent or decreased below 75 percent of the original contract quantity. Any allowance for an increase in quantity shall apply only to that portion in excess of 125 percent of original contract item quantity, or in case of a decrease below 75 percent, to the actual amount of work performed.

(B) Suspensions of Work Ordered by the Public Works Director, or designee:

(1) If the performance of all or any portion of the work is suspended or delayed by the Public Works Director, or designee, in writing, for an unreasonable period of time (not originally anticipated, customary, or inherent to the construction industry) and the Contractor believes that additional compensation and/or contract time is due as a result of such suspension or delay, the contractor shall submit to the Public Works Director, or designee, in writing, a request for adjustment within seven (7) calendar days of receipt of the notice to resume work. The request shall set forth the reasons and support for such adjustment.

(2) Upon receipt, the Public Works Director, or designee will evaluate the Contractor's request. If the Public Works Director, or designee agrees that the cost and/or time required for the performance of the contract has increased as a result of such suspension and the suspension was caused by conditions beyond the control of and not the fault of the Contractor, its suppliers, or subcontractors at any approved tier, and not caused by weather, the Public Works Director, or designee will make an adjustment (excluding profit) and modify the contract in writing accordingly. The Contractor will be notified of the Public Works Director, or designee's determination whether or not an adjustment of the contract is warranted.

(3) No contract adjustment will be allowed unless the Contractor has submitted the request for adjustment within the time prescribed.

(4) No contract adjustment will be allowed under this clause to the extent that performance would have been suspended or delayed by any other cause, or for which an adjustment is provided or excluded under any other term or condition of this contract.

(C) Differing Site Conditions:

(1) During the progress of the work, if subsurface or latent physical conditions are encountered at the site differing materially from those indicated in the contract or if unknown physical conditions of an unusual nature, differing materially from those ordinarily encountered and generally recognized as inherent in the work provided for in the contract, are encountered at the site, the party discovering such conditions shall promptly notify the other party in writing of the specific differing conditions before the site is disturbed and before the affected work is performed.

(2) Upon written notification, the Public Works Director, or designee will investigate the conditions and if it is determined that the conditions materially differ and cause an increase or decrease in the cost or time required for the performance of any work under the contract, an adjustment, excluding anticipated profits, will be made and the contract modified in

writing accordingly. The Public Works Director, or designee will notify the Contractor of the determination whether or not an adjustment of the contract is warranted.

(3) No contract adjustment, which results in a benefit to the Contractor, will be allowed unless the contractor has provided the required written notice.

(4) No contract adjustment will be allowed under this clause for any effects caused on unchanged work.

(5) The contract contains no indication of the soil conditions to be encountered. Caliche-like material is prevalent throughout the Nogales area and the Contractor is expected to utilize the proper equipment to excavate the material. Hard digging is not considered a differing site condition.

104-3 Extra Work (Incidental Work) is modified to add:

Incidental work shall include, but not be limited to, move-off, equipment facilities, furnishing water supply for construction, trenching, boring/jacking, saw cutting, cleanup, removal of debris, and removal of excess excavated material. Also included are the relocation and/or replacement of existing traffic and street name signs and mailboxes, other than what is noted on the plans. Incidental work shall also include grading in the sidewalk and driveway areas to match existing grades as shown on the plans and all other small items not itemized herein. There shall be no payment for incidental work. It shall be considered as part of the overall job and is included in other items of work and will not be considered for payment.

Items listed shall be considered as complete in place, unless stated otherwise. "Complete in Place" shall be defined as including all permanent patching and the replacement or repair of all outstanding discrepancies or deficiencies.

104-5 Maintenance of Traffic is modified to add:

It shall be the Contractor's responsibility to contact adjacent property owners one week prior to construction.

The Contractor shall maintain access to all side streets, access roads, businesses, residences, driveways, alleys, and parking lots, except for that period when asphaltic concrete is actually being placed and rolled across their frontage. Access across newly placed asphaltic concrete will be permitted as soon as the first pass of the roller has been made.

Access to all schools shall be maintained during the hours of school operation and activities. The contractor shall coordinate with each school site administrator.

The Contractor shall not store equipment, supplies, materials, or debris on the sidewalks or bike paths. Pedestrian access shall be maintained on at least one side of the street throughout the duration of the project.

104-6 Maintenance of the Project Site is modified to add:

All existing improvements not scheduled for removal or replacement (including but not limited to paved areas, river rock, decomposed granite, irrigation systems, landscaping, curbing, walkways, property corners, etc.) disturbed by the Contractor shall be repaired and/or replaced. The cost of such repair and replacement shall be incidental to the bid items necessitating such disturbance. It is the responsibility of the Contractor to become thoroughly familiar with all visible features of the site before preparing his proposal.

The Contractor shall employ a Registered Land Surveyor to locate and (if necessary) replace all existing property corners, which may be disturbed by any part of the construction work. The cost of such service shall be incidental to the bid items necessitating such disturbance.

104-8 Final Clean Up is modified to add:

No accumulation of material, debris, rubbish, etc., shall be left at any site overnight. All areas (sites) shall be left reasonably clean (as determined by the project inspector) at the end of each day.

SECTION 105 - CONTROL OF WORK

105-6 Cooperation with Utility Companies the 6th paragraph is modified to add:

The contractor will also acknowledge and agree that no monetary compensation will be given to the contractor by the City of Nogales as a result of the impacts or delays to his operations that are caused by the utility companies.

105-13 Load Restrictions is modified to add:

The Contractor shall coordinate haul routes with the Project Inspector and the Public Works Director, or designee. The Contractor is responsible for all damage done by the Contractor's hauling equipment. Residential streets are not designated for use by heavy traffic loads. Hauling equipment is required to use major arterial streets and collector streets.

105-13.02 Phasing of Construction is modified to add:

The project will be sequenced to minimize the impact to the traveling public and expedite the completion of the project.

The Contractor will submit a project schedule for review and approval by the City of Nogales. The Contractor must have an approved project schedule before he can begin work. The contractor will also submit a two-week look a head schedule at the weekly

construction meetings.

105-17.02 Substantial Completion: is modified to add:

The project is substantially complete and liquidated damages will no longer be assessed when all of the following have occurred:

(A) All original bid items of work have been completed and accepted and pedestrian and vehicular traffic can move unimpeded through the project;

(B) The only work left for completion is incidental, causes no disruption to pedestrian and vehicular traffic, and does not affect the safety and convenience of the public;

The decision whether the project is substantially complete is within the sole discretion of the Public Works Director, or designee.

Once substantial completion is granted, the Contractor shall actively work to achieve Final Acceptance of the construction phase of the Contract within 15-calendar days from the Substantial Completion date of that phase. Failure to prosecute the remaining work within this time period will result in the resumption of time charges and the application of liquidated damages from the date scheduled for final acceptance.

The Contractor is responsible for maintenance and repairs of any project work until final acceptance, at which time the City will accept the improvements for operation and maintenance.

SECTION 106 - CONTROL OF MATERIALS

106-4 Tests and Acceptance of Materials is modified to add:

The contractor shall be responsible for providing quality control testing on the project to ensure the provisions of the Specifications are being complied with. Quality control will include, but not limited to:

(A) Pavement density testing to establish rolling pattern

(B) Asphaltic concrete lab tests to ensure quality of material

(C) Trench backfill density testing

The Agency will retain the services of a materials testing firm to provide acceptance testing on the project. Testing provided by the Agency is not meant to take the place of, eliminate the need for or reduce the Contractor's responsibility for providing materials and a finished product that are in full compliance with the Plans and Specifications.

SECTION 108 - PROSECUTION AND PROGRESS

108-4 Prosecutions and Progress is modified to add:

Because this construction zone is primarily in a business and residential area, it will be necessary to provide accurate information regarding construction activities. It is also important that construction activities should be coordinated with the U. S. Post Office to provide access for mail delivery, the City of Nogales Environmental Services Department to provide access for trash pickup, Fire and Police to provide access for emergency services during construction. There will be no separate measurement and payment to the contractor in assisting these agencies with the service they provide to the affected parcels along all streets, as shown on the plans, during construction. Such cost will be included in the overall cost of the project. Access into and out of driveways will need to be maintained at all times during construction. If these conditions cannot be met, the Contractor shall provide means of ingress and egress at no cost to the city, and the driveway closure shall not last longer than 48 hours. The contractor is required to give notice to the affected parcel regarding the status of the driveway prior to the work commencing and also provide a written schedule as to when the work is to be completed.

108-8 Determination and Extension of Contract Time is modified to add:

Written requests for time extensions shall be submitted to the Public Works Director, or designee within 20 calendar days from the commencement of the delay or the right to an extension will be waived. Requests for time extensions shall indicate how the critical path of the overall project was impacted on the project schedule.

SECTION 109 - MEASUREMENT AND PAYMENT

109-5.02(G) Force Account Work by Subcontractor is modified to read:

When force account work is determined by the Public Works Director, or designee to require specialized labor or equipment not normally utilized by the contractor, and subcontractors perform such force account work, the contractor will be allowed an additional markup based on the following:

For Force Account work performed by subcontractors or any combination of subcontractors, the prime contractor will be allowed a ten percent supplemental markup on the first $10,000 of the work performed (less markups for overhead and profit).

For all subsequent Force Account work performed by subcontractors, the prime contractor will be allowed a five percent supplemental markup (less markups for overhead and profit).

The ten-percent supplemental markup shall apply to the first accumulated total of all force account work performed by all subcontractors.

The contractor shall submit payrolls or other cost data documents for all force account work performed by subcontractors. There shall be no payments made for force account work until receipt of proper and correct documentation

SECTION 202 - REMOVAL OF STRUCTURES AND OBSTRUCTIONS

202-1 Description is modified to add:

The contractor is cautioned to avoid excess removals or damage of existing vegetation, sidewalks, curbing, driveways, fences, walls, structures, utilities, and other improvements scheduled to remain. However, the contractor is advised that there exist numerous obstructions not shown on the plans that are in the right-of-way and is also advised to conduct a thorough field inspection prior to providing a bid for this item.

Any existing utility manhole, cleanout, pull box, or other structures, which are not designated to be replaced, removed or adjusted, and disturbed by the contractor during the construction of the job, shall be repaired or replaced by the contractor at his own expense to the satisfaction of the Public Works Director, or designee.

Saw cutting shall be considered incidental and shall be included in the overall cost of the project.

All other items to be removed will be paid for under Item No. 2020001, Removal of Structures and Obstructions, and will be paid for on a lump sum basis.

SECTION 203 - EARTHWORK

203-3.03 Construction Details is modified to add:

Where rock, hardpan, or other unyielding material is encountered, the Contractor shall remove it from below the foundation grade for a depth of at least 8 inch or 1/2 inch for each foot of fill over the top of the pipe (whichever is greater) but for no more than three-quarters of the nominal diameter of the pipe. Said material is defined as a material with volume in excess of one (1) cubic yard or solid material that cannot be removed with a Caterpillar 326 or equivalent, driven by an experienced operator, without drilling or blasting. The excavation below grade shall be backfilled with selected fine compressible material, such as silty clay or loam, and lightly compacted in layers not over 6 inches in uncompacted depth to form a uniform but yielding foundation.

Measurement:

Work for the removal of rock shall be measured based on expended labor, equipment and materials plus a 15 percent allowance for overhead and profit. No payment shall be made for the cushion material placed for the bed of the pipe.

Payment:

For rock excavation, Payment will be made as stated above with the following requirements:

(a) Miscellaneous. No additional allowance will be made for general superintendence, the use of small tools, or other costs for which no specific allowance is herein provided.

(b) Comparison of Record. The Contractor and the Public Works Director, or designee shall compare records of the cost of work at the end of each day. Agreement shall be indicated by signature of the Contractor and the Public Works Director, or designee or their duly authorized representatives.

(c) Statement. No payment will be made for work performed until the contractor has furnished the Public Works Director, or designee with duplicate itemized statements of the cost of such force account work detailed as follows:

1. Name, classification, date, daily hours, total hours, rate and extension for each laborer and foreman.

2. Designation, dates, daily hours, total hours, rental rate, and extension for each unit of machinery and equipment.

3. Quantities of materials, prices, and extensions.

4. Transportation of materials.

5. Cost of property damage, liability and workmen's compensation insurance premiums, unemployment insurance contributions, and social security tax.

Statements shall be accompanied and supported by a receipted invoice for all materials used and transportation charges. However, if materials used on the work are not specifically purchased for such work but are taken from the Contractors stock, then in lieu of the invoices the Contractor shall furnish an affidavit certifying that such materials were taken from his/her stock, that the quantity claimed was actually used, and that the price and transportation claimed represent the actual cost to the contractor.

If labor and materials under this item exceeds amount allocated, difference shall be paid by Owner.

If labor and materials under this item is less than amount allocated, the difference shall be reflected as a credit to contract sum.

SECTION 206 - FURNISH WATER SUPPLY

206-3 Construction Details is modified to add:

The contractor shall contact the City of Nogales to arrange for the construction water source in accordance with Water Department procedures. Construction water shall not be obtained from unmetered City of Nogales fire hydrants or an existing irrigation system. The Contractor will not be charged by the City for construction water, and applying water to the work will be considered incidental to and included in the payment for contract items.

SECTION 510 - POTABLE WATER SYSTEMS

510-1 Description is modified to add:

The work under this contract shall consist of furnishing all labor, equipment and materials required to install or modify City of Nogales Water Department Facilities. All materials and installation shall be in accordance with Tucson Water Standard Specifications and Details (2017 Edition). If there is a conflict between the Pima County Association of Governments (PAG) Standard Specifications and Details, the Tucson Water Standard Specifications and Details shall govern.

Any items or work not listed on bid form shall be considered incidental to the work and no additional payment will be made.

510-3 Construction Details is modified to add:

510-3.06 Potholing. This item shall be considered a mandatory item. The work under this item shall consist of furnishing all labor, equipment, and materials required to Pothole existing underground facilities necessary for construction of water system modifications. The contractor shall have written approval from the City of Nogales Water Department before proceeding with any Potholes.

Each Pothole shall determine the horizontal and vertical location of the utility relative to the horizontal and vertical controls established for the project. The pipe material and size shall also be noted. This data shall be forwarded to the City of Nogales Water Department for evaluation.

Potholing will be paid for as a lump sum as listed on the bid proposal form.

510-3.07 Joint Restraint. The work under this item shall consist of furnishing all labor, equipment and materials required to install Joint Restraint at the locations shown on the project plans, in accordance with the details shown on the project plans, and in accordance with the requirements of these Special Provisions.

Joint Restraint will be considered incidental to the cost of the new water facilities. Any Joint Restraints required for a complete installation, but not called for on the plans, shall also be considered incidental to the cost of the new water facilities.

510-3.08 Abandon Existing Water Mains. The existing water mains shown on the drawings to be abandoned in place shall be capped on each end and abandoned. Water Pipe Abandoned in Place shall be considered incidental to the cost of the new water facilities.

510-3.09 Remove and Dispose of Existing Water Mains. Removal of existing water mains shall be in accordance with Section 0204 of the Tucson Water Standard Specifications including Section 0204.0302 Handling and Disposal Procedures for Cement Asbestos Pipe. Remove and Dispose of Existing Water Mains, including Cement Asbestos Pipe, shall be paid for as a lump sum as listed on the bid proposal

form.

510-3.10 Remove and Dispose of Existing Fire Hydrant. The work under this item shall consist of furnishing all labor and equipment required to remove and dispose of existing fire hydrants at the locations shown in the project plans. Payment for the Removal and Disposal of Existing Fire Hydrants will be made for each hydrant removed at the unit price listed on the bid proposal form.

510-3.11 Connections. The work under this item shall consist of furnishing all labor, equipment and materials required to install Connections between new water pipe and existing water pipe. Connections shall be installed at the locations shown on the project plans and made with an approved transition coupling (see Tucson Water Approved Materials List). Payment for Connections will be made for each connection to the existing water main at the unit price listed on the bid proposal form.

510-3.12 Service Renewal (Meter not Relocated). The work under this item shall consist of furnishing all labor, equipment and materials required to do a Service Renewal. Service Renewal and appurtenances shall be installed at the locations shown on the project plans and in accordance with Tucson Water Standard Specifications and Details.

Measurement shall be for the actual number of linear feet of copper pipe installed. Payment will be made at the unit price bid, and will be compensation in full for furnishing and installing the service line material and work as follows: removal of obstructions, all excavation, service saddle, corporation stop, tap, copper pipe, curb stop, angle meter stop, tracer wire, connection to existing meter, backfilling, compaction, tie-in, testing and disinfecting.

SECTION 701 - MAINTENANCE AND PROTECTION OF TRAFFIC

All maintenance and protection of traffic (Traffic Control) shall be in accordance with Section 0202 of the Tucson Water Standard Specifications and Details. Measurement and Payment for Traffic Control shall be based on the lump sum listed on the bid proposal form.

Section 924 - MISCELLANEOUS WORK (MINOR ALTERNATIONS IN DETAILS OF CONSTRUCTION)

When the Agency makes alterations in the details of construction or Specifications, that are limited in scope, to the extent that the cost of the alterations will not exceed $10,000.00, the Public Works Director, or designee and the Contractor may reach agreement upon the scope of work and an amount to cover the cost of the work to be performed. This agreement shall be reflected in a letter from the Public Works Director, or designee to the Contractor, which, when executed by both parties, shall have the same force and effect as a supplemental agreement. Work shall not proceed until both parties have signed the agreement. This work will be paid for under Miscellaneous Work (Minor Alterations in Details of Construction), which shall serve as an account for the payment of letter agreements in accordance with this

specification. Any balance left in this account at the end of the construction phase will not be paid and will be expunged from the contract.

SECTION 925 - CONSTRUCTION SURVEYING AND LAYOUT

All construction surveying and layout shall be in accordance with Section 0215 of the Tucson Water Standard Specifications and Details. Payment for Construction Surveying and Layout shall be based on the lump sum listed on the bid proposal form.

SECTION C

WIFA COMPLIANCE DOCUMENTS

CITY OF NOGALES

ROYAL ROAD WATER MAIN REPLACEMENT

Water Infrastructure Finance Authority of Arizona
Clean Water Revolving Fund
Drinking Water Revolving Fund

CONTRACT PACKET for Governmental Borrowers

This packet lists required contract conditions that apply to all Clean Water and Drinking Water Revolving Fund projects and contains forms that must be used in the procurement process. Please review this packet prior to bidding.

PLEASE NOTE

- **This packet, in its entirety, must be physically included in all bidding, solicitation and contract documents.**
- Use of American Iron and Steel (AIS) applies to this project.:
    - AIS includes the following products made primarily of iron or steel: lined or unlined pipes and fittings, manhole covers and other municipal castings, hydrants, tanks, flanges, pipe clamps and restraints, valves, structural steel, reinforced precast concrete, and construction materials.
- Federal Davis-Bacon prevailing wages apply to this project.
    - Payment of the wages, fringe benefits and overtime rates is required.
    - The appropriate Federal (Davis-Bacon) Prevailing Wage Decision must be physically incorporated into the bidding and contract documents.
    - The construction category of Heavy (excluding dam construction) should typically be applied to all projects funded by WIFA. If you believe that a different category of wages, such as Building, should be applied to your project or portions of your project, please contact WIFA in advance.
    - Weekly certified payroll submittal is required under the Federal Davis-Bacon laws.
- Compliance with the Civil Rights Act and Equal Employment Opportunity is required.
- Promotion of Small, Minority and Women-owned Businesses and participation in EPA's Disadvantaged Business Enterprise (DBE) Program is required.
- Prohibition on Certain Telecommunication and Video Surveillance Services or Equipment.

Water Infrastructure Finance Authority of Arizona
Clean Water Revolving Fund
Drinking Water Revolving Fund

Required Contract Conditions

This project is being financed in whole or in part by the Water Infrastructure Finance Authority of Arizona through the Clean Water or Drinking Water Revolving Fund. The loan recipient is required to comply with the following federal and state laws, rules and regulations and must ensure that their contractor(s) also comply(ies) with these regulations, laws and rules.

1. (i) Title VI of the Civil Rights Act of 1964 (Pub. L. 88-352, 42 U.S.C. Sec. 2000d), (ii) the Rehabilitation Act of 1973 (Pub. L. 93-1123, 87 Stat. 355, 29 U.S.C. Sec. 794), (iii) the Age Discrimination Act of 1975 (Pub. L. 94-135 Sec. 303, 89 Stat. 713, 728, 42 U.S.C. Sec. 6102), (iv) Section 13 of the Federal Water Pollution Control Act (Pub. L. 92-500, 33 U.S.C. Sec. 1251), and subsequent regulations, ensures access to facilities or programs regardless of race, color, national origin, sex, age or handicap.

2. Equal Employment Opportunity (Executive Order 11246, as amended by Executive Orders 11375 and 12086 and subsequent regulations). Prohibits employment discrimination on the basis of race, color, religion, sex or national origin. Inclusion of the seven clauses in Section 202 of Executive Order 11246 as amended by Executive Orders 11375 and 12086 are required in all project related contracts and subcontracts over $10,000.

3. (i) Promoting the use of Small, Minority, and Women-owned Businesses (Executive Orders 11625, 12138 and 12432), (ii) Small Businesses Reauthorization & Amendment Act of 1988 (Section 129 of Pub. L. 100-590), (iii) Department of Veterans Affairs and Housing and Urban Development, and Independent Agencies Appropriations Act, 1993 (Pub. L. 102-389, 42 U.S.C. Sec. 437d), and (iv) Title X of the Clean Air Acts Amendments of 1990 (Pub. L. 101-549, 42 U.S.C. Sec. 7601 note) ("EPA's 10% statute"). Encourages recipients to award construction, supply and professional service contracts to minority and women's business enterprises (MBE/WBE) and small businesses and requires recipients to utilize affirmative steps in procurement.

4. Participation by Disadvantaged Business Enterprises in Procurement under Environmental Protection Agency (EPA) Financial Assistance Agreements (40 C.F.R. Part 33).

5. Debarment and Suspension (Executive Order 12549). Prohibits entering into contracts or sub-contracts with individuals or businesses who are debarred or suspended. Borrowers are required to check the status of all contractors (construction and professional services) and must require contractors to check the status of subcontractors for contracts expected to be equal to or over $25,000 via this Internet address: https://www.sam.gov/SAM/.

6. E-Verify (A.R.S. § 41-4401). A governmental entity shall not award a contract to any contractor or subcontractor that fails to comply with A.R.S. § 23-214(A). Every government entity shall (i) ensure that every government entity contractor and subcontractor complies with the federal immigration laws and regulations that relate to their employees and A.R.S. § 23-214(A); (ii) require that every government entity contract include the required provisions listed under A.R.S. § 41-4401(A); and (iii) establish procedures to conduct random verification of the employment records of government entity contractors and subcontractors.

Water Infrastructure Finance Authority of Arizona
Clean Water Revolving Fund
Drinking Water Revolving Fund

Use of American Iron and Steel

Public Law 113-76, enacted January 17, 2014

SEC. 436. (a)(1) None of the funds made available by a State water pollution control revolving fund as authorized by title VI of the Federal Water Pollution Control Act (33 U.S.C. 1381 et seq.) or made available by a drinking water treatment revolving loan fund as authorized by section 1452 of the Safe Drinking Water Act (42 U.S.C. 300j–12) shall be used for a project for the construction, alteration, maintenance, or repair of a public water system or treatment works unless all of the iron and steel products used in the project are produced in the United States.

(2) In this section, the term ''iron and steel products'' means the following products made primarily of iron or steel: lined or unlined pipes and fittings, manhole covers and other municipal castings, hydrants, tanks, flanges, pipe clamps and restraints, valves, structural steel, reinforced precast concrete, and construction materials.

(b) Subsection (a) shall not apply in any case or category of cases in which the Administrator of the Environmental Protection Agency (in this section referred to as the ''Administrator'') finds that—

(1) applying subsection (a) would be inconsistent with the public interest;

(2) iron and steel products are not produced in the United States in sufficient and reasonably available quantities and of a satisfactory quality; or

(3) inclusion of iron and steel products produced in the United States will increase the cost of the overall project by more than 25 percent.

(c) If the Administrator receives a request for a waiver under this section, the Administrator shall make available to the public on an informal basis a copy of the request and information available to the Administrator concerning the request, and shall allow for informal public input on the request for at least 15 days prior to making a finding based on the request. The Administrator shall make the request and accompanying information available by electronic means, including on the official public Internet Web site of the Environmental Protection Agency.

(d) This section shall be applied in a manner consistent with United States obligations under international agreements.

(e) The Administrator may retain up to 0.25 percent of the funds appropriated in this Act for the Clean and Drinking Water State Revolving Funds (CWSRF and DWSRF) for carrying out the provisions described in subsection (a)(1) for management and oversight of the requirements of this section.

(f) This section does not apply with respect to a project if a State agency approves the engineering plans and specifications for the project, in that agency's capacity to approve such plans and specifications prior to a project requesting bids, prior to the date of the enactment of this Act.

Highlights from EPA Guidance on Use of American Iron and Steel

Complete document available at http://water.epa.gov/grants_funding/aisrequirement.cfm

What is considered American Iron and Steel?

What is an iron or steel product?

For purposes of the CWSRF and DWSRF projects that must comply with the AIS requirement, an iron or steel product is one of the following made primarily of iron or steel that is permanently incorporated into the public water system or treatment works: lined or unlined pipes and fittings, manhole covers and other municipal castings, hydrants, tanks, flanges, pipe clamps and restraints, valves, structural steel, reinforced precast concrete, and construction materials.

What is a 'construction material' for purposes of the AIS requirement?

Construction materials are those articles, materials, or supplies made primarily of iron and steel, that are permanently incorporated into the project, not including mechanical and/or electrical components, equipment and systems. Some of these products may overlap with what is also considered "structural steel". This includes, but is not limited to, the following products: wire rod, bar, angles, concrete reinforcing bar, wire, wire cloth, wire rope and cables, tubing, framing, joists, trusses, fasteners (i.e., nuts and bolts), welding rods, decking, grating, railings, stairs, access ramps, fire escapes, ladders, wall panels, dome structures, roofing, ductwork, surface drains, cable hanging systems, manhole steps, fencing and fence tubing, guardrails, doors, and stationary screens.

What is NOT considered American Iron and Steel?

What is NOT considered a 'construction material' for purposes of the AIS requirement?

Mechanical and electrical components, equipment and systems are NOT considered construction materials. Mechanical equipment is typically that which has motorized parts and/or is powered by a motor. Electrical equipment is typically any machine powered by electricity and includes components that are part of the electrical distribution system. The following examples (including their appurtenances necessary for their intended use and operation) are NOT considered construction materials: pumps, motors, gear reducers, drives (including variable frequency drives (VFDs)), electric/pneumatic/manual accessories used to operate valves (such as electric valve actuators), mixers, gates, motorized screens (such as traveling screens), blowers/aeration equipment, compressors, meters, sensors, controls and switches, supervisory control and data acquisition (SCADA), membrane bioreactor systems, membrane filtration systems, filters, clarifiers and clarifier mechanisms, rakes, grinders, disinfection systems, presses (including belt presses), conveyors, cranes, HVAC (excluding ductwork), water heaters, heat exchangers, generators, cabinetry and housings (such as electrical boxes/enclosures), lighting fixtures, electrical conduit, emergency life systems, metal office furniture, shelving, laboratory equipment, analytical instrumentation, and dewatering equipment.

Water Infrastructure Finance Authority of Arizona
Clean Water Revolving Fund
Drinking Water Revolving Fund

Use of American Iron and Steel - De Minimis Waiver

Every water infrastructure project involves the use of thousands of miscellaneous, generally low-cost components that are essential for, but incidental to, the construction and are incorporated into the physical structure of the project. For many of these incidental components, the country of manufacture and the availability of alternatives is not always readily or reasonably identifiable prior to procurement in the normal course of business; for other incidental components, the county of manufacture may be known but the miscellaneous character in conjunction with the low cost, individually and (in total) as typically procured in bulk, mark them as properly incidental.

Examples of incidental components could include small washers, screws, fasteners (i.e., nuts and bolts), miscellaneous wire, corner bead, ancillary tube, etc.

Example of items that are clearly not incidental include significant process fittings (i.e., tees, elbows, flanges, and brackets), distribution system fittings and valves, force main valves, pipes for sewer collection and/or water distribution, treatment and storage tanks, large structural support structures, etc.

EPA has established a public interest waiver for de minimis incidental components. This action permits the use of products when they occur in de minimis incidental components of such projects.

- Funds used for such de minimis incidental components cumulatively may comprise no more than a total of 5% of the total cost of the materials used in and incorporated into a project.
- The cost of an individual item may not exceed 1% of the total cost of the materials used in and incorporated into a project.

Assistance recipients who wish to use this waiver should in consultation with their contractors determine the items to be covered by this waiver and must retain relevant documentation (i.e., invoices) as to those items in their project files.

Water Infrastructure Finance Authority of Arizona
Clean Water Revolving Fund
Drinking Water Revolving Fund

Davis-Bacon Contract Conditions (Federal Prevailing Wages)

PLEASE NOTE: Federal Davis-Bacon prevailing wages apply to this project. Payment of the wages, fringe benefits and overtime rates is required.

The "subrecipient" referred to throughout the Davis-Bacon contract conditions is the WIFA Borrower.

"WIFA" is the Water Infrastructure Finance Authority of Arizona, State Capitalization Grant recipient, recipient, or the Authority.

Wage Rate Requirements
(Also referred to as Attachment 6)

Preamble

With respect to the Clean Water and Drinking Water State Revolving Funds, EPA provides capitalization grants to each State which in turn provides subgrants or loans to eligible entities within the State. Although EPA and the State remain responsible for ensuring subrecipients' compliance with the wage rate requirements set forth herein, those subrecipients shall have the primary responsibility to maintain payroll records as described in Section 3(3)(ii)(A) below and for compliance as described in Section 5.

Requirements for Subrecipients That Are Governmental Entities:
The following terms and conditions specify how recipients will assist EPA in meeting its Davis-Bacon (DB) responsibilities with respect to State recipients and subrecipients that are governmental entities. If a subrecipient has questions regarding when DB applies, obtaining the correct DB wage determinations, DB provisions, or compliance monitoring, it may contact the State recipient. If a State recipient needs guidance, the recipient will contact EPA. The recipient or subrecipient may also obtain additional guidance from DOL's web site at https://www.dol.gov/agencies/whd/government-contracts/construction.

1. Applicability of the Davis-Bacon prevailing wage requirements.
Davis-Bacon prevailing wage requirements apply to the construction, alteration, and repair of treatment works carried out in whole or in part with assistance made available by a Clean Water Revolving Fund and to any construction project carried out in whole or in part by assistance made available by a Drinking Water Revolving Fund. If a subrecipient encounters a unique situation at a site that presents uncertainties regarding DB applicability, the subrecipient must discuss the situation with the State recipient before authorizing work on that site.

2. Obtaining Wage Determinations.

(a) Subrecipients shall obtain the wage determination for the locality in which a covered activity subject to DB will take place prior to issuing requests for bids, proposals, quotes or other methods for soliciting contracts (solicitation) for activities subject to DB. These wage determinations shall be incorporated into solicitations and any subsequent contracts. Prime contracts must contain a provision requiring that subcontractors follow the wage determination incorporated into the prime contract.

(i) While the solicitation remains open, the subrecipient shall monitor https://beta.sam.gov/ weekly to ensure that the wage determination contained in the solicitation remains current. The subrecipient shall amend the solicitation if DOL issues a modification more than 10 days prior to the closing date (i.e. bid opening) for the solicitation. If DOL modifies or supersedes the applicable wage determination 10 days or less prior to the closing date, the subrecipient may request a finding from the State recipient that there is not a reasonable time to notify interested contractors of the modification of the wage determination. The State recipient will provide a report of its findings to the subrecipient.

(ii) If the subrecipient does not award the contract within 90 days of the closure of the solicitation, any modifications or supersedes DOL makes to the wage

determination contained in the solicitation shall be effective unless the State recipient, at the request of the subrecipient, obtains an extension of the 90 day period from DOL pursuant to 29 CFR 1.6(c)(3)(iv). The subrecipient shall monitor https://beta.sam.gov/ on a weekly basis if it does not award the contract within 90 days of closure of the solicitation to ensure that wage determinations contained in the solicitation remain current.

(b) If the subrecipient carries out activity subject to DB by issuing a task order, work assignment or similar instrument to an existing contractor (ordering instrument) rather than by publishing a solicitation, the subrecipient shall insert the appropriate DOL wage determination from https://beta.sam.gov/ into the ordering instrument. Typically, the appropriate wage determination would be the one in effect on the date the task order, work assignment or similar instrument is awarded.

(c) Subrecipients shall review all subcontracts subject to DB entered into by prime contractors to verify that the prime contractor has required its subcontractors to include the applicable wage determinations.

(d) As provided in 29 CFR 1.6(f), DOL may issue a revised wage determination applicable to a subrecipient's contract after the award of a contract or the issuance of an ordering instrument if DOL determines that the subrecipient has failed to incorporate a wage determination or has used a wage determination that clearly does not apply to the contract or ordering instrument. If this occurs, the subrecipient shall either terminate the contract or ordering instrument and issue a revised solicitation or ordering instrument or incorporate DOL's wage determination retroactive to the beginning of the contract or ordering instrument by change order. The subrecipient's contractor must be compensated for any increases in wages resulting from the use of DOL's revised wage determination.

3. Contract and Subcontract provisions.

The recipient shall insure that the subrecipient(s) shall insert in full in any contract in excess of $2,000 which is entered into for the actual construction, alteration and/or repair, including painting and decorating, of a treatment work under the CWSRF or a construction project under the DWSRF financed in whole or in part from Federal funds or in accordance with guarantees of a Federal agency or financed from funds obtained by pledge of any contract of a Federal agency to make a loan, grant or annual contribution (except where a different meaning is expressly indicated), and which is subject to the labor standards provisions of any of the acts listed in 29 CFR § 5.1, the following clauses:

(1) Minimum wages.

(i) All laborers and mechanics employed or working upon the site of the work will be paid unconditionally and not less often than once a week, and without subsequent deduction or rebate on any account (except such payroll deductions as are permitted by regulations issued by the Secretary of Labor under the Copeland Act (29 CFR part 3)), the full amount of wages and bona fide fringe benefits (or cash equivalents thereof) due at time of payment computed at rates not less than those contained in the wage determination of the Secretary of Labor which is attached hereto and made a part hereof, regardless of any contractual relationship which may be alleged to exist between the contractor and such laborers and mechanics.

Contributions made or costs reasonably anticipated for bona fide fringe benefits under section 1(b)(2) of the Davis-Bacon Act on behalf of laborers or mechanics are considered wages paid to such laborers or mechanics, subject to the provisions of paragraph (a)(1)(iv) of this section; also, regular contributions made or costs incurred for more than a weekly period (but not less often than quarterly) under plans, funds, or programs which cover the particular weekly period, are deemed to be constructively made or incurred during such weekly period. Such laborers and mechanics shall be paid the appropriate wage rate and fringe benefits on the wage determination for the classification of work actually performed, without regard to skill, except as provided in 29 CFR § 5.5(a)(4). Laborers or mechanics performing work in more than one classification may be compensated at the rate specified for each classification for the time actually worked therein: provided that the employer's payroll records accurately set forth the time spent in each classification in which work is performed. The wage determination (including any additional classification and wage rates conformed under paragraph (a)(1)(ii) of this section) and the Davis-Bacon poster (WH-1321) shall be posted at all times by the contractor and its subcontractors at the site of the work in a prominent and accessible place where it can be easily seen by the workers.

Subrecipients may obtain wage determinations from the U.S. Department of Labor's web site, https://beta.sam.gov/.

(ii)(A) The subrecipient(s), on behalf of EPA, shall require that any class of laborers or mechanics, including helpers, which is not listed in the wage determination and which is to be employed under the contract shall be classified in conformance with the wage determination. The State award official shall approve a request for an additional classification and wage rate and fringe benefits therefore only when the following criteria have been met:

(1) The work to be performed by the classification requested is not performed by a classification in the wage determination; and

(2) The classification is utilized in the area by the construction industry; and

(3) The proposed wage rate, including any bona fide fringe benefits, bears a reasonable relationship to the wage rates contained in the wage determination.

(B) If the contractor and the laborers and mechanics to be employed in the classification (if known), or their representatives, and the subrecipient(s) agree on the classification and wage rate (including the amount designated for fringe benefits where appropriate), documentation of the action taken and the request, including the local wage determination shall be sent by the subrecipient(s) to the State award official. The State award official will transmit the request, to the Administrator of the Wage and Hour Division, Employment Standards Administration, U.S. Department of Labor, Washington, DC 20210 and to the EPA DB Regional Coordinator concurrently. The Administrator, or an authorized representative, will approve, modify, or disapprove every additional classification request within 30 days of receipt and so advise the State award official or will notify the State award official within the 30-day period that additional time is necessary.

(C) In the event the contractor, the laborers or mechanics to be employed in the classification or their representatives, and the subrecipient(s) do not agree on the proposed classification and wage rate (including the amount designated for fringe benefits, where appropriate), the award official shall refer the request and the local wage determination, including the views of

all interested parties and the recommendation of the State award official, to the Administrator for determination. The request shall be sent to the EPA DB Regional Coordinator concurrently. The Administrator, or an authorized representative, will issue a determination within 30 days of receipt of the request and so advise the contracting officer or will notify the contracting officer within the 30-day period that additional time is necessary.

(D) The wage rate (including fringe benefits where appropriate) determined pursuant to paragraphs (a)(1)(ii)(B) or (C) of this section, shall be paid to all workers performing work in the classification under this contract from the first day on which work is performed in the classification.

(iii) Whenever the minimum wage rate prescribed in the contract for a class of laborers or mechanics includes a fringe benefit which is not expressed as an hourly rate, the contractor shall either pay the benefit as stated in the wage determination or shall pay another bona fide fringe benefit or an hourly cash equivalent thereof.

(iv) If the contractor does not make payments to a trustee or other third person, the contractor may consider as part of the wages of any laborer or mechanic the amount of any costs reasonably anticipated in providing bona fide fringe benefits under a plan or program, provided that the Secretary of Labor has found, upon the written request of the contractor, that the applicable standards of the Davis-Bacon Act have been met. The Secretary of Labor may require the contractor to set aside in a separate account assets for the meeting of obligations under the plan or program.

(2) Withholding. The subrecipient(s), shall upon written request of the EPA Award Official or an authorized representative of the Department of Labor, withhold or cause to be withheld from the contractor under this contract or any other Federal contract with the same prime contractor, or any other federally-assisted contract subject to Davis-Bacon prevailing wage requirements, which is held by the same prime contractor, so much of the accrued payments or advances as may be considered necessary to pay laborers and mechanics, including apprentices, trainees, and helpers, employed by the contractor or any subcontractor the full amount of wages required by the contract. In the event of failure to pay any laborer or mechanic, including any apprentice, trainee, or helper, employed or working on the site of the work, all or part of the wages required by the contract, the recipient may, after written notice to the contractor, sponsor, applicant, or owner, take such action as may be necessary to cause the suspension of any further payment, advance, or guarantee of funds until such violations have ceased.

(3) Payrolls and basic records.

(i) Payrolls and basic records relating thereto shall be maintained by the contractor during the course of the work and preserved for a period of three years thereafter for all laborers and mechanics working at the site of the work. Such records shall contain the name, address, and social security number of each such worker, his or her correct classification, hourly rates of wages paid (including rates of contributions or costs anticipated for bona fide fringe benefits or cash equivalents thereof of the types described in section 1(b)(2)(B) of the Davis-Bacon Act), daily and weekly number of hours worked, deductions made and actual wages paid. Whenever the Secretary of Labor has found under 29 CFR 5.5(a)(1)(iv) that the wages of any laborer or mechanic include the amount of any costs reasonably anticipated in providing benefits under a plan or program described in section 1(b)(2)(B) of the Davis-Bacon Act, the

contractor shall maintain records which show that the commitment to provide such benefits is enforceable, that the plan or program is financially responsible, and that the plan or program has been communicated in writing to the laborers or mechanics affected, and records which show the costs anticipated or the actual cost incurred in providing such benefits. Contractors employing apprentices or trainees under approved programs shall maintain written evidence of the registration of apprenticeship programs and certification of trainee programs, the registration of the apprentices and trainees, and the ratios and wage rates prescribed in the applicable programs.

(ii)(A) The contractor shall submit weekly, for each week in which any contract work is performed, a copy of all payrolls to the subrecipient, that is, the entity that receives the sub-grant or loan from the State capitalization grant recipient. Such documentation shall be available on request of the State recipient or EPA. As to each payroll copy received, the subrecipient shall provide written confirmation in a form satisfactory to the State indicating whether or not the project is in compliance with the requirements of 29 CFR 5.5(a)(1) based on the most recent payroll copies for the specified week. The payrolls shall set out accurately and completely all of the information required to be maintained under 29 CFR 5.5(a)(3)(i), except that full social security numbers and home addresses shall not be included on the weekly payrolls. Instead the payrolls shall only need to include an individually identifying number for each employee (e.g., the last four digits of the employee's social security number). The required weekly payroll information may be submitted in any form desired. Optional Form WH-347 is available for this purpose from the Wage and Hour Division Web site at www.dol.gov/whd/forms/wh347instr.htm or its successor site. The prime contractor is responsible for the submission of copies of payrolls by all subcontractors. Contractors and subcontractors shall maintain the full social security number and current address of each covered worker, and shall provide them upon request to the subrecipient(s) for transmission to the State or EPA if requested by EPA, the State, the contractor, or the Wage and Hour Division of the Department of Labor for purposes of an investigation or audit of compliance with prevailing wage requirements. It is not a violation of this section for a prime contractor to require a subcontractor to provide addresses and social security numbers to the prime contractor for its own records, without weekly submission to the subrecipient(s).

(B) Each payroll submitted shall be accompanied by a "Statement of Compliance," signed by the contractor or subcontractor or his or her agent who pays or supervises the payment of the persons employed under the contract and shall certify the following:

(1) That the payroll for the payroll period contains the information required to be provided under § 5.5 (a)(3)(ii) of Regulations, 29 CFR part 5, the appropriate information is being maintained under § 5.5 (a)(3)(i) of Regulations, 29 CFR part 5, and that such information is correct and complete;

(2) That each laborer or mechanic (including each helper, apprentice, and trainee) employed on the contract during the payroll period has been paid the full weekly wages earned, without rebate, either directly or indirectly, and that no deductions have been made either directly or indirectly from the full wages earned, other than permissible deductions as set forth in Regulations, 29 CFR part 3;

(3) That each laborer or mechanic has been paid not less than the applicable wage rates and fringe benefits or cash equivalents for the classification of work performed, as specified in the applicable wage determination incorporated into the contract.

(C) The weekly submission of a properly executed certification set forth on the reverse side of Optional Form WH-347 shall satisfy the requirement for submission of the "Statement of Compliance" required by paragraph (a)(3)(ii)(B) of this section.

(D) The falsification of any of the above certifications may subject the contractor or subcontractor to civil or criminal prosecution under section 1001 of title 18 and section 231 of title 31 of the United States Code.

(iii) The contractor or subcontractor shall make the records required under paragraph (a)(3)(i) of this section available for inspection, copying, or transcription by authorized representatives of the State, EPA or the Department of Labor, and shall permit such representatives to interview employees during working hours on the job. If the contractor or subcontractor fails to submit the required records or to make them available, the Federal agency or State may, after written notice to the contractor, sponsor, applicant, or owner, take such action as may be necessary to cause the suspension of any further payment, advance, or guarantee of funds. Furthermore, failure to submit the required records upon request or to make such records available may be grounds for debarment action pursuant to 29 CFR 5.12.

(4) Apprentices and trainees -

(i) Apprentices. Apprentices will be permitted to work at less than the predetermined rate for the work they performed when they are employed pursuant to and individually registered in a bona fide apprenticeship program registered with the U.S. Department of Labor, Employment and Training Administration, Office of Apprenticeship Training, Employer and Labor Services, or with a State Apprenticeship Agency recognized by the Office, or if a person is employed in his or her first 90 days of probationary employment as an apprentice in such an apprenticeship program, who is not individually registered in the program, but who has been certified by the Office of Apprenticeship Training, Employer and Labor Services or a State Apprenticeship Agency (where appropriate) to be eligible for probationary employment as an apprentice. The allowable ratio of apprentices to journeymen on the job site in any craft classification shall not be greater than the ratio permitted to the contractor as to the entire work force under the registered program. Any worker listed on a payroll at an apprentice wage rate, who is not registered or otherwise employed as stated above, shall be paid not less than the applicable wage rate on the wage determination for the classification of work actually performed. In addition, any apprentice performing work on the job site in excess of the ratio permitted under the registered program shall be paid not less than the applicable wage rate on the wage determination for the work actually performed. Where a contractor is performing construction on a project in a locality other than that in which its program is registered, the ratios and wage rates (expressed in percentages of the journeyman's hourly rate) specified in the contractor's or subcontractor's registered program shall be observed. Every apprentice must be paid at not less than the rate specified in the registered program for the apprentice's level of progress, expressed as a percentage of the journeymen hourly rate specified in the applicable wage determination. Apprentices shall be paid fringe benefits in accordance with the provisions of the apprenticeship program. If the Apprenticeship program does not specify fringe benefits, apprentices must be paid the full amount of fringe benefits listed on the wage determination for the applicable classification. If the Administrator determines that a different practice prevails for the applicable apprentice classification, fringes shall be paid in accordance with that determination. In the event the Office of Apprenticeship Training, Employer and Labor Services, or a State Apprenticeship Agency

recognized by the Office, withdraws approval of an apprenticeship program, the contractor will no longer be permitted to utilize apprentices at less than the applicable predetermined rate for the work performed until an acceptable program is approved.

(ii) Trainees. Except as provided in 29 CFR 5.16, trainees will not be permitted to work at less than the predetermined rate for the work performed unless they are employed pursuant to and individually registered in a program which has received prior approval, evidenced by formal certification by the U.S. Department of Labor, Employment and Training Administration. The ratio of trainees to journeymen on the job site shall not be greater than permitted under the plan approved by the Employment and Training Administration. Every trainee must be paid at not less than the rate specified in the approved program for the trainee's level of progress, expressed as a percentage of the journeyman hourly rate specified in the applicable wage determination. Trainees shall be paid fringe benefits in accordance with the provisions of the trainee program. If the trainee program does not mention fringe benefits, trainees shall be paid the full amount of fringe benefits listed on the wage determination unless the Administrator of the Wage and Hour Division determines that there is an apprenticeship program associated with the corresponding journeyman wage rate on the wage determination which provides for less than full fringe benefits for apprentices. Any employee listed on the payroll at a trainee rate who is not registered and participating in a training plan approved by the Employment and Training Administration shall be paid not less than the applicable wage rate on the wage determination for the classification of work actually performed. In addition, any trainee performing work on the job site in excess of the ratio permitted under the registered program shall be paid not less than the applicable wage rate on the wage determination for the work actually performed. In the event the Employment and Training Administration withdraws approval of a training program, the contractor will no longer be permitted to utilize trainees at less than the applicable predetermined rate for the work performed until an acceptable program is approved.

(iii) Equal employment opportunity. The utilization of apprentices, trainees and journeymen under this part shall be in conformity with the equal employment opportunity requirements of Executive Order 11246, as amended, and 29 CFR part 30.

(5) Compliance with Copeland Act requirements. The contractor shall comply with the requirements of 29 CFR part 3, which are incorporated by reference in this contract.

(6) Subcontracts. The contractor or subcontractor shall insert in any subcontracts the clauses contained in 29 CFR 5.5(a)(1) through (10) and such other clauses as the EPA determines may by appropriate, and also a clause requiring the subcontractors to include these clauses in any lower tier subcontracts. The prime contractor shall be responsible for the compliance by any subcontractor or lower tier subcontractor with all the contract clauses in 29 CFR 5.5.

(7) Contract termination; debarment. A breach of the contract clauses in 29 CFR 5.5 may be grounds for termination of the contract, and for debarment as a contractor and a subcontractor as provided in 29 CFR 5.12.

(8) Compliance with Davis-Bacon and Related Act requirements. All rulings and interpretations of the Davis-Bacon and Related Acts contained in 29 CFR parts 1, 3, and 5 are herein incorporated by reference in this contract.

(9) Disputes concerning labor standards. Disputes arising out of the labor standards provisions of this contract shall not be subject to the general disputes clause of this contract. Such disputes shall be resolved in accordance with the procedures of the Department of Labor set forth in 29 CFR parts 5, 6, and 7. Disputes within the meaning of this clause include disputes between the contractor (or any of its subcontractors) and subrecipient(s), the State recipient, EPA, the U.S. Department of Labor, or the employees or their representatives.

(10) Certification of eligibility.

(i) By entering into this contract, the contractor certifies that neither it (nor he or she) nor any person or firm who has an interest in the contractor's firm is a person or firm ineligible to be awarded Government contracts by virtue of section 3(a) of the Davis-Bacon Act or 29 CFR 5.12(a)(1).

(ii) No part of this contract shall be subcontracted to any person or firm ineligible for award of a Government contract by virtue of section 3(a) of the Davis-Bacon Act or 29 CFR 5.12(a)(1).

(iii) The penalty for making false statements is prescribed in the U.S. Criminal Code, 18 U.S.C. 1001.

4. Contract Provision for Contracts in Excess of $100,000.

(a) Contract Work Hours and Safety Standards Act. The subrecipient shall insert the following clauses set forth in paragraphs (a)(1), (2), (3), and (4) of this section in full in any contract in an amount in excess of $100,000 and subject to the overtime provisions of the Contract Work Hours and Safety Standards Act. These clauses shall be inserted in addition to the clauses required by Item 3 above or 29 CFR 4.6. As used in this paragraph, the terms laborers and mechanics include watchmen and guards.

(1) Overtime requirements. No contractor or subcontractor contracting for any part of the contract work which may require or involve the employment of laborers or mechanics shall require or permit any such laborer or mechanic in any workweek in which he or she is employed on such work to work in excess of 40 hours in such workweek unless such laborer or mechanic receives compensation at a rate not less than one and one-half times the basic rate of pay for all hours worked in excess of 40 hours in such workweek.

(2) Violation; liability for unpaid wages; liquidated damages. In the event of any violation of the clause set forth in paragraph (a)(1) of this section the contractor and any subcontractor responsible therefore shall be liable for the unpaid wages. In addition, such contractor and subcontractor shall be liable to the United States (in the case of work done under contract for the District of Columbia or a territory, to such District or to such territory), for liquidated damages. Such liquidated damages shall be computed with respect to each individual laborer or mechanic, including watchmen and guards, employed in violation of the clause set forth in paragraph (a)(1) of this section, in the sum of $10 for each calendar day on which such individual was required or permitted to work in excess of the standard workweek of 40 hours without payment of the overtime wages required by the clause set forth in paragraph (a)(1) of this section.

(3) Withholding for unpaid wages and liquidated damages. The subrecipient**,** upon written request of the EPA Award Official or an authorized representative of the Department of Labor, shall withhold or cause to be withheld, from any moneys payable on account of work performed by the contractor or subcontractor under any such contract or any other Federal contract with the same prime contractor, or any other federally-assisted contract subject to the Contract Work Hours and Safety Standards Act, which is held by the same prime contractor, such sums as may be determined to be necessary to satisfy any liabilities of such contractor or subcontractor for unpaid wages and liquidated damages as provided in the clause set forth in paragraph (b)(2) of this section.

(4) Subcontracts. The contractor or subcontractor shall insert in any subcontracts the clauses set forth in paragraph (a)(1) through (4) of this section and also a clause requiring the subcontractors to include these clauses in any lower tier subcontracts. The prime contractor shall be responsible for compliance by any subcontractor or lower tier subcontractor with the clauses set forth in paragraphs (a)(1) through (4) of this section.

(b) In addition to the clauses contained in Item 3 above, in any contract subject only to the Contract Work Hours and Safety Standards Act and not to any of the other statutes cited in 29 CFR 5.1, the subrecipient shall insert a clause requiring that the contractor or subcontractor shall maintain payrolls and basic payroll records during the course of the work and shall preserve them for a period of three years from the completion of the contract for all laborers and mechanics, including guards and watchmen, working on the contract. Such records shall contain the name and address of each such employee, social security number, correct classifications, hourly rates of wages paid, daily and weekly number of hours worked, deductions made, and actual wages paid. Further, the subrecipient shall insert in any such contract a clause providing that the records to be maintained under this paragraph shall be made available by the contractor or subcontractor for inspection, copying, or transcription by authorized representatives of the recipient and the Department of Labor, and the contractor or subcontractor will permit such representatives to interview employees during working hours on the job.

5. Compliance Verification

(a) The subrecipient shall periodically interview a sufficient number of employees entitled to DB prevailing wages (covered employees) to verify that contractors or subcontractors are paying the appropriate wage rates. As provided in 29 CFR 5.6(a)(6), all interviews must be conducted in confidence. The subrecipient must use WIFA's interview form, Department of Labor's Standard Form 1445, or equivalent documentation to memorialize the interviews. WIFA's interview form and instructions are included with this packet.

(b) The subrecipient shall establish and follow an interview schedule based on its assessment of the risks of noncompliance with DB posed by contractors or subcontractors and the duration of the contract or subcontract. Subrecipients must conduct more frequent interviews if the initial interviews or other information indicated that there is a risk that the contractor or subcontractor is not complying with DB. Subrecipients shall immediately conduct interviews in response to an alleged violation of the prevailing wage requirements. All interviews shall be conducted in confidence.

(c) The subrecipient shall periodically conduct spot checks of a representative sample of weekly payroll data to verify that contractors or subcontractors are paying the appropriate

wage rates. The subrecipient shall establish and follow a spot check schedule based on its assessment of the risks of noncompliance with DB posed by contractors or subcontractors and the duration of the contract or subcontract. At a minimum, if practicable, the subrecipient should spot check payroll data within two weeks of each contractor or subcontractor's submission of its initial payroll data and two weeks prior to the completion date the contract or subcontract. Subrecipients must conduct more frequent spot checks if the initial spot check or other information indicates that there is a risk that the contractor or subcontractor is not complying with DB. In addition, during the examinations the subrecipient shall verify evidence of fringe benefit plans and payments thereunder by contractors and subcontractors who claim credit for fringe benefit contributions.

(d) The subrecipient shall periodically review contractors and subcontractors use of apprentices and trainees to verify registration and certification with respect to apprenticeship and training programs approved by either the U.S Department of Labor or a state, as appropriate, and that contractors and subcontractors are not using disproportionate numbers of laborers, trainees and apprentices. These reviews shall be conducted in accordance with the schedules for spot checks and interviews described in Item 5(b) and (c) above.

(e) Subrecipients must immediately report potential violations of the DB prevailing wage requirements to the EPA DB contact listed below and to the appropriate DOL Wage and Hour District Office listed at www.dol.gov/whd.

Joe Ochab, EPA Region 9, 75 Hawthorne St. (P-22), San Francisco, CA 94105

Clean Water Revolving Fund
Drinking Water Revolving Fund

Equal Employment

Inclusion of these seven clauses (excerpt from Executive Order No. 11246, Section 202 as amended by Executive Order 11375 and 12086) is required in all CWRF and DWRF project related contracts and subcontracts over $10,000:

During the performance of this contract, the contractor agrees as follows:

(1) The contractor will not discriminate against any employee or applicant for employment because of race, color, religion, sex or national origin. The contractor will take affirmative action to ensure that applicants are employed, and that employees are treated during employment, without regard to their race, color, religion, sex, or national origin. Such action shall include, but not be limited to the following: employment, upgrading, demotion, or transfer; recruitment or recruitment advertising; layoff or termination; rates of pay or other forms of compensation; and selection for training, including apprenticeship. The contractor agrees to post in conspicuous places, available to employees and applicants for employment, notices to be provided by the contracting officer setting forth the provisions of this nondiscrimination clause.

(2) The contractor will, in all solicitations or advertisements for employees placed by or on behalf of the contractor, state that all qualified applicants will receive consideration for employment without regard to race, color, religion, sex, or national origin.

(3) The contractor will send to each labor union or representative of workers with which he has a collective bargaining agreement or other contract or understanding, a notice, to be provided by the agency contracting officer, advising the labor union or worker's representative of the contractor's commitments under Section 202 of Executive Order No. 11246 of September 24, 1965, and shall post copies of the notice in conspicuous places available to employees and applicants for employment.

(4) The contractor will comply with all provisions of Executive Order No. 11246 of Sept. 24, 1965, and all of the rules, regulations, and relevant orders of the Secretary of Labor.

(5) The contractor will furnish all information and reports required by Executive Order No. 11246 of Sept. 24, 1965, and by the rules, regulations and orders of the Secretary of Labor, or pursuant thereto, and will permit access to his books, records, and accounts by the contracting agency and the Secretary of Labor for purposes of investigation to ascertain compliance with such rules, regulations, and orders.

(6) In the event of the contractor's noncompliance with the nondiscrimination clauses of this contract or with any of such rules, regulations, or orders, this contract may be cancelled, terminated or suspended in whole or in part and the contractor may be declared ineligible for further Government contracts in accordance with procedures authorized in

Executive Order No. 11246 of Sept. 24, 1965, and such other sanctions may be imposed and remedies invoked as provided in Executive Order No. 11246 of Sept. 24, 1965, or by rule, regulation, or order of the Secretary of Labor, or as otherwise provided by law.

(7) The contractor will include the provisions of paragraphs (1) through (7) in every subcontract or purchase order unless exempted by rules, regulations, or orders of the Secretary of Labor issued pursuant to Section 204 of Executive Order No. 11246 of Sept. 24, 1965, so that such provisions will be binding upon each subcontractor or vendor. The contractor will take such action with respect to any subcontract or purchase order as may be directed by the Secretary of Labor as a means of enforcing such provisions including sanctions for noncompliance: provided, however, that in the event the contractor becomes involved in, or is threatened with, litigation with a subcontractor or vendor as a result of such direction, the contractor may request the United States to enter into such litigation to protect the interests of the United States.

Water Infrastructure Finance Authority of Arizona
Clean Water Revolving Fund
Drinking Water Revolving Fund

Disadvantaged Business Enterprises (DBE)

Good Faith Efforts

Borrowers and their prime contractors must follow, document, and maintain documentation of their good faith efforts as listed below to ensure that Certified Disadvantaged Business Enterprises* (DBEs) have the opportunity to participate in the project by increasing DBE awareness of procurement efforts and outreach.

1. Ensure DBEs are made aware of contracting opportunities to the fullest extent practicable through outreach and recruitment activities; including placing DBEs on solicitation lists and soliciting them whenever they are potential sources.
2. Make information on forthcoming opportunities available to DBEs and arrange time frames for contracts and establish delivery schedules, where the requirements permit, in a way that encourages and facilitates participation by DBEs in the competitive process. This includes, whenever possible, posting solicitation for bids or proposals for a minimum of 30 calendar days before the bid or proposal closing date.
3. Consider in the contracting process whether firms competing for large contracts could be subcontracted with DBEs. This will include dividing total requirements when economically feasible into smaller tasks or quantities to permit maximum participation by DBEs in the competitive process.
4. Encourage contracting with a consortium of DBEs when a contract is too large for one of these firms to handle individually.
5. Use the services and assistance of the Small Business Administration and the Minority Business Development Agency of the U. S. Department of Commerce.
6. If the prime contractor awards subcontracts, require the prime contractor to take the steps in numbers 1 through 5 above.

Required Contract Conditions

These conditions must be included in all procurement contracts entered into by the Borrower for all DWRF and CWRF projects:

1. The prime contractor must pay its subcontractor for satisfactory performance no more than 30 days from the prime contractor's receipt of payment from the owner.
2. The prime contractor must notify the owner in writing prior to the termination of any Disadvantaged Business Enterprise subcontractor for convenience by the prime contractor.
3. If a Disadvantaged Business Enterprise contractor fails to complete work under the subcontract for any reason, the prime contractor must employ the six good faith efforts if soliciting a replacement contractor.
4. The prime contractor must continue to employ the six good faith efforts even if the prime contractor has achieved its fair share objectives.

5. ~~The prime contractor must provide EPA Form 6100-2 DBE Program Subcontractor Participation Form** to all of its Disadvantaged Business Enterprise subcontractors. Disadvantaged Business Enterprise subcontractors may send completed Form 6100-2 directly to the Region 9 DBE Coordinator listed below:~~

   ~~**Joe Ochab, EPA Region 9, 75 Hawthorne St. (P-22), San Francisco, CA 94105**~~

6. ~~The prime contractor must have its Disadvantaged Business Enterprise subcontractors complete EPA Form 6100-3 – DBE Program Subcontractor Performance Form**. The prime contractor must include all completed forms as part of the prime contractor's bid or proposal package to the Borrower.~~
7. ~~The prime contractor must complete and submit EPA Form 6100-4 DBE Program Subcontractor Utilization Form** as part of the prime contractor's bid or proposal package to the Borrower.~~
8. A Borrower must ensure that each procurement contract it awards contains the following terms and conditions:

   The contractor shall not discriminate on the basis of race, color, national origin or sex in the performance of this contract. The contractor shall carry out applicable requirements of 40 CFR Part 33 in the award and administration of contracts awarded under EPA financial assistance agreements. Failure by the contractor to carry out these requirements is a material breach of this contract which may result in the termination of this contract or other legally available remedies.

** A DBE is a Disadvantaged, Minority, or Woman Business Enterprise that has been certified by an entity from which EPA accepts certifications as described in 40 CFR 33.204-33.205 or certified by EPA. EPA accepts certifications from entities that meet or exceed EPA certification standards as described in 40 CFR 33.202.*

*** More information about DBE requirements can be found at https://www.epa.gov/grants/frequently-asked-questions-disadvantaged-business-enterprises*

Water Infrastructure Finance Authority of Arizona
Clean Water Revolving Fund
Drinking Water Revolving Fund

Prohibition on Certain Telecommunication and Video Surveillance Equipment

Public Law 115-232, enacted August 13, 2020

WIFA borrowers must comply with regulations at 2 CFR 200.216, *Prohibition on certain telecommunication and video surveillance services or equipment*, implementing section 889 of Public Law 115-232. The regulation prohibits the use of Federal funds to procure (enter into, extend, or renew contracts) or obtain equipment, systems, or services that use "covered telecommunications equipment or services" identified in the regulation as a substantial or essential component of any system, or as critical technology as part of any system. Prohibitions extend to the use of Federal funds by recipients and subrecipients to enter into a contract with an entity that "uses any equipment, system, or service that uses covered telecommunications equipment or services" as a substantial or essential component of any system, or as critical technology as part of any system. Certain equipment, systems, or services, including equipment, systems, or services produced or provided by entities subject to the prohibition are recorded in the System for Award Management exclusion list (*https://sam.gov/SAM/*).

As described in section 889 of Public Law 115-232, covered telecommunications equipment or services includes:

- **Telecommunications equipment produced by Huawei Technologies Company or ZTE Corporation (or any subsidiary or affiliate of such entities).**
- For the purpose of public safety, security of government facilities, physical security surveillance of critical infrastructure, and other security purposes, **video surveillance and telecommunications equipment produced by Hytera Communications Corporation, Hangzhou Hikvision Digital Technology Company, or Dahua Technology Company (or any subsidiary or affiliate of such entities).**
- Telecommunications or video surveillance services provided by such entities or using such equipment.
- Telecommunications or video surveillance equipment or services produced or provided by an entity that the Secretary of Defense, in consultation with the Director of the National Intelligence or the Director of the Federal Bureau of Investigation, reasonably believes to be an entity owned or controlled by, or otherwise connected to, the government of a covered foreign country.

There is no exhaustive list of components and services that fall under the prohibition. Borrowers and contractors should be particularly mindful of project components with internet or cellular connections. For example, automatic meter reading (AMR) technology and advanced metering infrastructure (AMI), instrumentation control systems (e.g. process control systems, distributed control systems and programmable logic controls), and security cameras and other electronic security measures. Items included in the prohibition are not eligible costs, and WIFA cannot reimburse borrowers for these costs.

ATTACHMENTS

Davis-Bacon Forms
WH-1321 - Davis-Bacon poster
WH-347 - Payroll and certification form
SF1444 - Wage Determination Request form
Employee Interview form

American Iron and Steel
Sample Step Certification Letter (Processed/ Manufactured) Sample Step Certification Letter (Shipped/ Provided)

EMPLOYEE RIGHTS

UNDER THE DAVIS-BACON ACT

FOR LABORERS AND MECHANICS EMPLOYED ON FEDERAL OR FEDERALLY ASSISTED CONSTRUCTION PROJECTS

PREVAILING WAGES

You must be paid not less than the wage rate listed in the Davis-Bacon Wage Decision posted with this Notice for the work you perform.

OVERTIME

You must be paid not less than one and one-half times your basic rate of pay for all hours worked over 40 in a work week. There are few exceptions.

ENFORCEMENT

Contract payments can be withheld to ensure workers receive wages and overtime pay due, and liquidated damages may apply if overtime pay requirements are not met. Davis-Bacon contract clauses allow contract termination and debarment of contractors from future federal contracts for up to three years. A contractor who falsifies certified payroll records or induces wage kickbacks may be subject to civil or criminal prosecution, fines and/or imprisonment.

APPRENTICES

Apprentice rates apply only to apprentices properly registered under approved Federal or State apprenticeship programs.

PROPER PAY

If you do not receive proper pay, or require further information on the applicable wages, contact the Contracting Officer listed below:

Water Infrastructure Finance Authority of Arizona
100 N. 7th Ave. Suite 130
Phoenix, AZ 85007

Tel: {602) 364-1310
Fax: {602) 364-1327

or contact the U.S. Department of Labor's Wage and Hour Division.

WHD
WAGE AND HOUR DIVISION
UNITED STATES DEPARTMENT OF LABOR

1-866-487-9243
TTY: 1-877-889-5627
www.dol.gov/whd

WH1321 REV 10/17

DERECHOS DEL EMPLEADO

BAJO LA LEY DAVIS-BACON

PARA OBREROS Y MECÁNICOS EMPLEADOS EN PROYECTOS DE CONSTRUCCIÓN FEDERAL O CON ASISTENCIA FEDERAL

SALARIOS PREVALECIENTES

No se le puede pagar menos de la tasa de pago indicada en la Decisión de Salarios Davis-Bacon fijada con este Aviso para el trabajo que Ud. desempeña.

SOBRETIEMPO

Se le ha de pagar no menos de tiempo y medio de su tasa básica de pago por todas las horas trabajadas en exceso de 40 en una semana laboral. Existen pocas excepciones.

CUMPLIMIENTO

Se pueden retener pagos por contratos para asegurarse que los obreros reciban los salarios y el pago de sobretiempo debidos, y se podría aplicar daños y perjuicios si no se cumple con las exigencias del pago de sobretiempo. Las cláusulas contractuales de Davis-Bacon permiten la terminación y exclusión de contratistas para efectuar futuros contratos federales hasta tres años. El contratista que falsifique los registros certificados de las nóminas de pago o induzca devoluciones de salarios puede ser sujeto a procesamiento civil o criminal, multas y/o encarcelamiento.

APRENDICES

Las tasas de aprendices sólo se aplican a aprendices correctamente inscritos bajo programas federales o estatales aprobados.

PAGO APROPIADO

Si Ud. no recibe el pago apropiado, o precisa de información adicional sobre los salarios aplicables, póngase en contacto con el Contratista Oficial que aparece abajo:

Water Infrastructure Finance Authority of Arizona
100 N. 7th Ave. Suite 130
Phoenix, AZ 85007

Tel: {602) 364-1310
Fax: {602) 364-1327

o póngase en contacto con la División de Horas y Salarios del Departamento de Trabajo de los EE.UU.

DIVISIÓN DE HORAS Y SALARIOS
DEPARTAMENTO DE TRABAJO DE LOS EE.UU.

1-866-487-9243
TTY: 1-877-889-5627
www.dol.gov/whd

WH1321 SPA REV 10/17

U.S. DEPARTMENT OF LABOR

Instructions For Completing Payroll Form, WH-347

- WH-347 (PDF)
  OMB Control No. 1235-0008, Expires 04/30/2021.

General: Form WH-347has been made available for the convenience of contractors and subcontractors required by their Federal or Federally-aided construction-type contracts and subcontracts to submit weekly payrolls. Properly filled out, this form will satisfy the requirements of Regulations, Parts 3 and 5 (29 C.F.R., Subtitle A), as to payrolls submitted in connection with contracts subject to the Davis-Bacon and related Acts.

While completion of Form WH-347 is optional, it is mandatory for covered contractors and subcontractors performing work on Federally financed or assisted construction contracts to respond to the information collection contained in 29 C.F.R. §§ 3.3, 5.5(a). The Copeland Act (40 U.S.C. § 3145) requires contractors and subcontractors performing work on Federally financed or assisted construction contracts to "furnish weekly a statement with respect to the wages paid each employee during the preceding week." U.S. Department of Labor (DOL) Regulations at 29 C.F.R. § 5.5(a)(3)(ii) require contractors to submit weekly a copy of all payrolls to the Federal agency contracting for or financing the construction project, accompanied by a signed "Statement of Compliance" indicating that the payrolls are correct and complete and that each laborer or mechanic has been paid not less than the proper Davis-Bacon prevailing wage rate for the work performed. DOL and federal contracting agencies receiving this information review the information to determine that employees have received legally required wages and fringe benefits.

Under the Davis-Bacon and related Acts, the contractor is required to pay not less than prevailing wage, including fringe benefits, as predetermined by the Department of Labor. The contractor's obligation to pay fringe benefits may be met either by payment of the fringe benefits to bona fide benefit plans, funds or programs or by making payments to the covered workers (laborers and mechanics) as cash in lieu of fringe benefits.

This payroll provides for the contractor to show on the face of the payroll all monies to each worker, whether as basic rates or as cash in lieu of fringe benefits, and provides for the contractor's representation in the statement of compliance on the payroll (as shown on page 2) that he/she is paying for fringe benefits required by the contract and not paid as cash in lieu of fringe benefits. Detailed instructions concerning the preparation of the payroll follow:

Contractor or Subcontractor: Fill in your firm's name and check appropriate box.

Address: Fill in your firm's address.

Payroll No.: Beginning with the number "1", list the payroll number for the submission.

For Week Ending: List the workweek ending date.

Project and Location: Self-explanatory.

Project or Contract No.: Self-explanatory.

Column 1 - Name and Individual Identifying Number of Worker: Enter each worker's full name and an individual identifying number (e.g., last four digits of worker's social security number) on each weekly payroll submitted.

Column 2 - No. of Withholding Exemptions: This column is merely inserted for the employer's convenience and is not a requirement of Regulations, Part 3 and 5.

Column 3 - Work Classifications: List classification descriptive of work actually performed by each laborer or mechanic. Consult classification and minimum wage schedule set forth in contract specifications. If additional classifications are deemed necessary, see Contracting Officer or Agency representative. An individual may be shown as having worked in more than one classification provided an accurate breakdown or hours worked in each classification is maintained and shown on the submitted payroll by use of separate entries.

Column 4 - Hours worked: List the day and date and straight time and overtime hours worked in the applicable boxes. On all contracts subject to the Contract Work Hours Standard Act, enter hours worked in excess of 40 hours a week as "overtime".

Column 5 - Total: Self-explanatory

Column 6 - Rate of Pay {Including Fringe Benefits): In the "straight time" box for each worker, list the actual hourly rate paid for straight time worked, plus cash paid in lieu of fringe benefits paid. When recording the straight time hourly rate, any cash paid in lieu of fringe benefits may be shown separately from the basic rate. For example, "$12.25/.40" would reflect a $12.25 base hourly rate plus $0.40 for fringe benefits. This is of assistance in correctly computing overtime. See "Fringe Benefits" below. When overtime is worked, show the overtime hourly rate paid plus any cash in lieu of fringe benefits paid in the "overtime" box for each worker; otherwise, you may skip this box. See "Fringe Benefits" below. Payment of not less than time and one-half the basic or regular rate paid is required for overtime under the Contract Work Hours Standard Act of 1962 if the prime contract exceeds $100,000. In addition to paying no less than the predetermined rate for the classification which an individual works, the contractor must pay amounts predetermined as fringe benefits in the wage decision made part of the contract to approved fringe benefit plans, funds or programs or shall pay as cash in lieu of fringe benefits. See "FRINGE BENEFITS" below.

Column 7 - Gross Amount Earned: Enter gross amount earned on this project. If part of a worker's weekly wage was earned on projects other than the project described on this payroll, enter in column 7 first the amount earned on the Federal or Federally assisted project and then the gross amount earned during the week on all projects, thus "$163.00/$420.00" would reflect the earnings of a worker who earned $163.00 on a Federally assisted construction project during a week in which $420.00 was earned on all work.

Column 8 - Deductions: Five columns are provided for showing deductions made. If more than five deduction are involved, use the first four columns and show the balance deductions under "Other" column; show actual total under "Total Deductions" column; and in the attachment to the payroll describe the deduction(s) contained in the "Other" column. All deductions must be in accordance with the provisions of the Copeland Act Regulations, 29 C.F.R., Part 3. If an individual worked on other jobs in addition to this project, show actual deductions from his/her weekly gross wage, and indicate that deductions are based on his gross wages.

Column 9 - Net Wages Paid for Week: Self-explanatory.

Totals - Space has been left at the bottom of the columns so that totals may be shown if the contractor so desires.

Statement Required by Regulations, Parts 3 and 5: While the "statement of compliance" need not be notarized, the statement (on page 2 of the payroll form) is subject to the penalties provided by 18 U.S.C. § 1001, namely, a fine, possible imprisonment of not more than 5 years, or both. Accordingly, the party signing this statement should have knowledge of the facts represented as true.

Items land 2: Space has been provided between items (1) and (2) of the statement for describing any deductions made. If all deductions made are adequately described in the "Deductions" column above, state "*See* Deductions column in this payroll." *See* "FRINGE BENEFITS" below for instructions concerning filling out paragraph 4 of the statement.

Item 4 FRINGE BENEFITS - Contractors who pay all required fringe benefits: If paying all fringe benefits to approved plans, funds, or programs in amounts not less than were determined in the applicable wage decision of the Secretary of Labor, show the basic cash hourly rate and overtime rate paid to each worker on the face of the payroll and check paragraph 4(a) of the statement on page 2 of the WH-347 payroll form to indicate the payment. Note any exceptions in section 4(c).

Contractors who pay no fringe benefits: If not paying all fringe benefits to approved plans, funds, or programs in amounts of at least those that were determined in the applicable wage decision of the Secretary of Labor, pay any remaining fringe benefit amount to each laborer and mechanic and insert in the "straight time" of the "Rate of Pay" column of the payroll an amount not less than the predetermined rate for each classification plus the amount of fringe benefits determined for each classification in the application wage decision. Inasmuch as it is not necessary to pay time and a half on cash paid in lieu of fringe benefits, the overtime rate shall be not less than the sum of the basic predetermined rate, plus the half time premium on basic or regular rate, plus the required cash in lieu of fringe benefits at the straight time rate. In addition, check paragraph 4(b) of the statement on page 2 the payroll form to indicate the payment of fringe benefits in cash directly to the workers. Note any exceptions in section 4(c).

Use of Section 4{c), Exceptions

Any contractor who is making payment to approved plans, funds, or programs in amounts less than the wage determination requires is obliged to pay the deficiency directly to the covered worker as cash in lieu of fringe benefits. Enter any exceptions to section 4(a) or 4(b) in section 4(c). Enter in the Exception column the craft, and enter in the Explanation column the hourly amount paid each worker as cash in lieu of fringe benefits and the hourly amount paid to plans, funds, or programs as fringe benefits. The contractor must pay an amount not less than the predetermined rate plus cash in lieu of fringe benefits as shown in section 4(c) to each such individual for all hours worked (unless otherwise provided by applicable wage determination) on the Federal or Federally assisted project. Enter the rate paid and amount of cash paid in lieu of fringe benefits per hour in column 6 on the payroll. See paragraph on "Contractors who pay no fringe benefits" for computation of overtime rate.

Public Burden Statement: We estimate that it will take an average of 55 minutes to complete this collection of information, including time for reviewing instructions, searching existing data sources, gathering and maintaining the data needed, and completing and reviewing the collection of information. If you have any comments regarding these estimates or any other aspect of this collection of information, including suggestions for reducing this burden, send them to the Administrator, Wage and Hour Division, U.S. Department of Labor, Room S3502, 200 Constitution Avenue, N.W.,Washington, D.C. 20210.

Note: In order to view, fill out, and print PDF forms, you need Adobe® Acrobat® Reader® version 5 or later, which you may download for free at www.adobe.com/products/acrobat/readstep2.html.

Topics For Workers For Employers Resources Interpretive Guidance State Laws News

Wage and Hour Division

An agency within the U.S. Department of Labor

200 Constitution Ave NW
Washington, DC 20210
1-866-4-US-WAGE
1-866-487-9243

www.dol.gov

FEDERAL GOVERNMENT

White House
Coronavirus Resources
Severe Storm and Flood Recovery Assistance
Disaster Recovery Assistance
DisasterAssistance.gov
USA.gov
No Fear Act Data
U.S. Office of Special Counsel

LABOR DEPARTMENT

About DOL
Guidance Search
Espanol
Office of Inspector General
Subscribe to the DOL Newsletter
Read the DOL Newsletter
Emergency Accountability Status Link
A to Z Index

WHD PORTALS

YouthRules!
Wage Determinations

Connect With DOL

Site Map | Important Website Notices | Privacy & Security Statement

U.S. Department of Labor
Wage and Hour Division

PAYROLL

(For Contractor's Optional Use; See Instructions at www.dol.gov/whd/forms/wh347instr.htm)

Persons are not required to respond to the collection of information unless it displays a currently valid OMB control number.

U.S. Wage and Hour Division

Rev. Dec. 2008

NAME OF CONTRACTOR ☐ OR SUBCONTRACTOR ☐	ADDRESS	OMB No.1235-0008 Expires: 04/30/2021
PAYROLL NO. / FOR WEEK ENDING	PROJECT AND LOCATION	PROJECT OR CONTRACT NO.

(1) NAME AND INDIVIDUAL IDENTIFYING NUMBER (e.g., LAST FOUR DIGITS OF SOCIAL SECURITY NUMBER) OF WORKER	(2) NO. OF WITHHOLDING EXEMPTIONS	(3) WORK CLASSIFICATION	OT. OR ST.	(4) DAY AND DATE — HOURS WORKED EACH DAY							(5) TOTAL HOURS	(6) RATE OF PAY	(7) GROSS AMOUNT EARNED	DEDUCTIONS — FICA	WITH-HOLDING TAX			OTHER	TOTAL DEDUCTIONS	(9) NET WAGES PAID FOR WEEK
			O																	
			S																	
			O																	
			S																	
			O																	
			S																	
			O																	
			S																	
			O																	
			S																	
			O																	
			S																	
			O																	
			S																	

While completion of Form WH-347 is optional, it is mandatory for covered contractors and subcontractors performing work on Federally financed or assisted construction contracts to respond to the information collection contained in 29 C.F.R. §§ 3.3, 5.5(a). The Copeland Act (40 U.S.C. § 3145) contractors and subcontractors performing work on Federally financed or assisted construction contracts to "furnish weekly a statement with respect to the wages paid each employee during the preceding week." U.S. Department of Labor (DOL) regulations at 29 C.F.R. § 5.5(a)(3)(ii) require contractors to submit weekly a copy of all payrolls to the Federal agency contracting for or financing the construction project, accompanied by a signed "Statement of Compliance" indicating that the payrolls are correct and complete and that each laborer or mechanic has been paid not less than the proper Davis-Bacon prevailing wage rate for the work performed. DOL and federal contracting agencies receiving this information review the information to determine that employees have received legally required wages and fringe benefits.

Public Burden Statement

We estimate that is will take an average of 55 minutes to complete this collection, including time for reviewing instructions, searching existing data sources, gathering and maintaining the data needed, and completing and reviewing the collection of information. If you have any comments regarding these estimates or any other aspect of this collection, including suggestions for reducing this burden, send them to the Administrator, Wage and Hour Division, U.S. Department of Labor, Room S3502, 200 Constitution Avenue, N.W. Washington, D.C. 20210

(over)

Date _____

I, _____ _____
(Name of Signatory Party) (Title)

do hereby state

(1) That I pay or supervise the payment of the persons employed by

_____ on the
(Contractor or Subcontractor)

_____; that during the payroll period commencing on the
(Building or Work)

_____ day of_____,_____, and ending the_____day of_____,_____,

all persons employed on said project have been paid the full weekly wages earned, that no rebates have been or will be made either directly or indirectly to or on behalf of said

_____ from the full
(Contractor or Subcontractor)

weekly wages earned by any person and that no deductions have been made either directly or indirectly from the full wages earned by any person, other than permissible deductions as defined in Regulations, Part 3 (29 C.F.R. Subtitle A), issued by the Secretary of Labor under the Copeland Act, as amended (48 Stat. 948, 63 Stat. 108, 72 Stat. 967; 76 Stat. 357; 40 U.S.C. § 3145), and described below

_____

_____

_____

_____

(2) That any payrolls otherwise under this contract required to be submitted for t he above period are correct and complete; that the wage rates for laborers or mechanics contained therein are not less than the applicable wage rates contained in any wage determination incorporated into the contract; that the classifications set forth therein for each laborer or mechanic conform with the work he performed.

(3) That any apprentices employed in the above period are duly registered in a bona fide apprenticeship program registered with a State apprenticeship agency recognized by the Bureau of Apprenticeship and Training, United States Department of Labor, or if no such recognized agency exists in a State, are registered with the Bureau of Apprenticeship and Training, United States Department of Labor.

(4) That

(a) WHERE FRINGE BENEFITS ARE PAID TO APPROVED PLANS, FUNDS, OR PROGRAMS

☐ – in addition to the basic hourly wage rates paid to each laborer or mechanic listed in the above referenced payroll, payments of fringe benefits as listed in the contract have been or will be made to appropriate programs for the benefit of such employees, except as noted in section 4(c) below.

(b) WHERE FRINGE BENEFITS ARE PAID IN CASH

☐ – Each laborer or mechanic listed in the above referenced payroll has been paid, as indicated on the payroll, an amount not less than the sum of the applicable basic hourly wage rate plus the amount of the required fringe benefits as listed in the contract, except as noted in section 4(c) below.

(c) EXCEPTIONS

EXCEPTION (CRAFT)	EXPLANATION

REMARKS

NAME AND TITLE	SIGNATURE

THE WILLFUL FALSIFICATION OF ANY OF THE ABOVE STATEMENTS MAY SUBJECT THE CONTRACTOR OR SUBCONTRACTOR TO CIVIL OR CRIMINAL PROSECUTION. SEE SECTION 1001 OF TITLE 18 AND SECTION 231 OF TITLE 31 OF THE UNITED STATES CODE.

SF 1444 Instructions
Request for Additional Classification and Wage Rate Form

Attached is a copy of the federal standard form 1444, Request for Authorization of Additional Classification and Wage Rate. This form must be submitted when a wage classification is not listed on the applicable wage decision. The classification and wage rate submitted on the form should bear a reasonable likeness to similar skill classifications listed in the federal wage determination.

The prime contractor is responsible for the completion and submission of this form. The following are the procedures for the completion and submission of the form:

1. Check "Construction Contract" in the upper right-hand corner.

Box 2. Insert the following information:
Water Infrastructure Finance Authority of Arizona
(WIFA) 100 N. 7th Ave., Ste. 130
Phoenix, AZ 85007

Box 3. Prime contractor's name.

Box 4. Date the prime contractor submitted the form to WIFA.

Box 5. Contract number.

Box 6. Date the bid was opened, if applicable.

Box 7. Date the contract was awarded.

Box 8. Actual date the contractor will be starting or started work.

Box 9. (This box is not applicable.)

Box 10. List all subcontractors that will utilize the labor classification listed in box 13a. If none, enter "N/A."

Box 11. Project title and a brief description of the project.

Box 12. Include both the city and county, as well as Arizona.

Box 13. Federal "General Decision Number" (e.g. AZ00009) and the date.

Box 13a. List all classifications not covered by the federal wage determination, which are utilized by either the prime or the subcontractor(s).

Box13b. The wage rate should bear a reasonable likeness to the category classification wage rates (equipment operators, laborers, truck drivers, etc.) listed in the federal wage determination.

Box 13c. The fringe rate should bear a reasonable likeness to the category classification fringe rates (equipment operators, laborers, truck drivers, etc.) listed in the federal wage determination.

Box 14. If there is a subcontractor listed on line 10, its representative signs on this line.

Box 15. The prime contractor's representative must sign on this line.

Box 16. If the contractor has a specific employee who will be performing the labor classification(s) listed in box 13a, or if the employees' have legal representation (union, etc.), they should sign this line and include their title. If no specific employee is identified to perform work under the listed classification(s), then write "unknown" in the box. The "Agree" or "Disagree" boxes are checked by anyone signing in boxes 14, 15, and 16.

The contractor will make a copy of the completed signed form and submit the original to WIFA (not required to be in quadruplicate).

WIFA will complete the section below the heavy line TO BE COMPLETED BY CONTRACTING OFFICER and submit it to DOL and EPA. Typically DOL responds in 30 days. WIFA will send the borrower a copy of the approved wage classification.

REQUEST FOR AUTHORIZATION OF ADDITIONAL CLASSIFICATION AND RATE

CHECK APPROPRIATE BOX
☐ SERVICE CONTRACT
☐ CONSTRUCTION CONTRACT

OMB Control Number: 9000-0066
Expiration Date: 4/30/2022

Paperwork Reduction Act Statement - This information collection meets the requirements of 44 U.S.C. § 3507, as amended by section 2 of the Paperwork Reduction Act of 1995. You do not need to answer these questions unless we display a valid Office of Management and Budget (OMB) control number. The OMB control number for this collection is 9000-0066. We estimate that it will take .5 hours to read the instructions, gather the facts, and answer the questions. Send only comments relating to our time estimate, including suggestions for reducing this burden, or any other aspects of this collection of information to: U.S. General Services Administration, Regulatory Secretariat Division (M1V1CB), 1800 F Street, NW, Washington, DC 20405.

INSTRUCTIONS: THE CONTRACTOR SHALL COMPLETE ITEMS 3 THROUGH 16, KEEP A PENDING COPY, AND SUBMIT THE REQUEST, IN QUADRUPLICATE, TO THE CONTRACTING OFFICER.

1. **TO:**
ADMINISTRATOR,
WAGE AND HOUR DIVISION
U.S. DEPARTMENT OF LABOR
WASHINGTON, DC 20210

2. **FROM:** *(REPORTING OFFICE)*

3. CONTRACTOR

4. DATE OF REQUEST

5. CONTRACT NUMBER

6. DATE BID OPENED *(SEALED BIDDING)*

7. DATE OF AWARD

8. DATE CONTRACT WORK STARTED

9. DATE OPTION EXERCISED (If *APPLICABLE) (SERVICE CONTRACT ONLY)*

10. SUBCONTRACTOR *(IF ANY)*

11. PROJECT AND DESCRIPTION OF WORK *(ATTACH ADDITIONAL SHEET IF NEEDED)*

12. LOCATION (*CITY, COUNTY, AND STATE)*

13. IN ORDER TO COMPLETE THE WORK PROVIDED FOR UNDER THE ABOVE CONTRACT, IT IS NECESSARY TO ESTABLISH THE FOLLOWING RATE(S) FOR THE INDICATED CLASSIFICATION(S) NOT INCLUDED IN THE DEPARTMENT OF LABOR DETERMINATION

NUMBER: DATED:

a. LIST IN ORDER: PROPOSED CLASSIFICATION TITLE(S); JOB DESCRIPTION(S); DUTIES; AND RATIONALE FOR PROPOSED CLASSIFICATIONS *(Service contracts only)* *(Use reverse or attach additional sheets, if necessary)*	b. WAGE RATE(S)	c. FRINGE BENEFITS PAYMENTS

14. SIGNATURE AND TITLE OF SUBCONTRACTOR REPRESENTATIVE *(IF ANY)*

15. SIGNATURE AND TITLE OF PRIME CONTRACTOR REPRESENTATIVE

16. SIGNATURE OF EMPLOYEE OR REPRESENTATIVE

TITLE

CHECK APPROPRIATE BOX-REFERENCING BLOCK 13.
☐ **AGREE** ☐ **DISAGREE**

TO BE COMPLETED BY CONTRACTING OFFICER *(CHECK AS APPROPRIATE - SEE FAR 22.1019 (SERVICE CONTRACT LABOR STANDARDS) OR FAR 22.406-3 (CONSTRUCTION WAGE RATE REQUIREMENTS))*

☐ THE INTERESTED PARTIES AGREE AND THE CONTRACTING OFFICER RECOMMENDS APPROVAL BY THE WAGE AND HOUR DIVISION. AVAILABLE INFORMATION AND RECOMMENDATIONS ARE ATTACHED.

☐ THE INTERESTED PARTIES CANNOT AGREE ON THE PROPOSED CLASSIFICATION AND WAGE RATE. A DETERMINATION OF THE QUESTION BY THE WAGE AND HOUR DIVISION IS THEREFORE REQUESTED. AVAILABLE INFORMATION AND RECOMMENDATIONS ARE ATTACHED.

(Send 3 copies to the Department of Labor)

SIGNATURE OF CONTRACTING OFFICER OR REPRESENTATIVE

TITLE AND COMMERCIAL TELEPHONE NUMBER

DATE SUBMITTED

WIFA PROJECT WAGE RATE WORKSHEET

The construction category of Heavy (excluding dam construction) should typically be applied to all projects funded by WIFA. If you believe that a different category of wages, such as Building, should be applied to your project or portions of your project, please contact WIFA in advance.

PROJECT NAME:	WAGE DECISION NUMBER AND DATE:
WIFA PROJECT NUMBER:	PROJECT COUNTY:

WORK CLASSIFICATION	BASIC HOURLY RATE	FRINGE BENEFITS	TOTAL HOURLY WAGE RATE

ADDITIONAL CLASSIFICATIONS NEEDED (DOL FORM SF-1444)

WORK CLASSIFICATION	BASIC HOURLY RATE	FRINGE BENEFITS	TOTAL HOURLY WAGE RATE	DATE OF WIFA SUBMISSION	DATE OF DOL APPROVAL

EMPLOYEE INTERVIEW FOR DAVIS-BACON LABOR STANDARDS
INSTRUCTIONS

The Davis-Bacon Act requires interviews to determine if the contractor is complying with the Federal Davis-Bacon prevailing wages. Interviewers must use WIFA's interview form, Department of Labor's Standard Form 1445, or equivalent documentation. WIFA's form may be downloaded from WIFA's website: www.azwifa.gov/contract-packet. See Section 5: Compliance Verification of the WIFA Contract Packet for the interview requirements.

Interviews should be conducted in the following manner:

Interviewer: Each borrower is required to conduct interviews. The interviewer must be someone unaffiliated with the contractors and on site regularly (i.e., project manager, or consultant, etc.).

Purpose: The purpose of the interview is to ensure that the work actually being done by construction workers and mechanics is consistent with the corresponding job titles and wages being reported on the certified payrolls. The payroll checker must compare the interviews to the payrolls to identify inconsistencies. Any inconsistencies must be addressed. Keep in mind that both the interview and the information on the interview form are considered confidential. Interviews should be conducted individually and in private. All employees on the work site should be available for an interview if requested by the interviewer; however, the employee's participation is voluntary.

Number of Interviews: A representative sample of interviews is required. The interviewer must interview at least one person from every contractor and subcontractor company on the job site.

Timing: Interviews should be done, at minimum, on two different occasions. One should be within the first two weeks after construction begins and whenever a new subcontractor begins work on the project. The second round should be done closer to substantial completion while workers are still on site. Additional interviews should be done when issues or discrepancies arise and should be targeted at the contractor in question.

Records: Interview forms should be kept by the borrower with the rest of the project records at least three years after the contract is completed. The interview forms have employee information that should be kept confidential from contractors generally, but the project folders must be available for inspection by WIFA, EPA, or Department of Labor upon request.

Item	**INTERVIEW**
2b. - 2c.	This information is required in case it is necessary to follow up with the employee.
3a.	The interviewer should make it clear to the employee that these items relate only to work on this project, not necessarily to other projects.
3b.	Employees should be encouraged (but not required) to produce pay stubs or pay envelopes which document the wages received.
5. - 6.	If the employee does not know where the wage rate decision and Davis-Bacon poster are posted, the interviewer should inform the person of the location(s) and encourage them to look at the documents.
8.	Many employees will not be familiar with the term "fringe benefits." The interviewer should explain to the employee that fringe can be paid as part of their hourly rate, or can be in the form of benefits such as vacation, medical, etc.
9a. -9c.	The interviewer should make it clear to the employee that these items relate only to work on this project, not necessarily to other projects.

11. - 13.	Be certain that the employee's responses are specific. The employee may not be familiar with the classifications used on the wage determination and thus may use a term which may not be found on the determination. The answers to questions 12 and 13 should elicit enough information to identify the appropriate wage classification. Confirm the presumed wage classification with the employee.

INTERVIEWER'S COMMENTS	
16.	This represents some of the most important information gathered while conducting on-site interviews. Be specific about the duties the employee was observed performing. It may be easiest to make these observations before the interview. Comments in this section should include whether observed duties and tools used were the same as those described by the employee during the interview.
19. - 20.	This refers to the wage decision and date as posted on the job site. This information should be consistent with the contract documents.

FOR USE BY PAYROLL CHECKER	
21. - 22.	The payroll checker can be the same person as the interviewer. If not, it should be someone familiar with the wage rate decision, labor standards provisions and the construction project. This part of the form is completed *after* receipt of the payroll reports covering the week during which the interview was conducted. It is important that the payroll reports are received in a timely manner so that the payroll checker can compare and verify the interview information and investigate discrepancies. Once the corresponding payroll reports are received, the information on the interview form must be compared to the payroll reports. Specifically, the payroll checker must check that: • the payroll report is consistent with the dates and hours the employee worked (Items 9a.-9c.). • the payroll report indicates that the employee's job classification is the same as that indicated by the employee in Items 11 - 13. • the payroll report indicates that the employee received the wages as s/he stated in Item 3a. • the payroll report indicates that the employee received the fringe benefits in the amount and as stated in Item 8. • the wages/fringes paid agree with the wage rate decision in the contract and any additional classification requests approved by DOL (SF1444). Any discrepancies noted between the interview form and payroll reports shall be reported in Item 22. <u>If discrepancies are noted, follow-up actions to resolve the discrepancies must be taken</u>. For example, if the payroll indicates that the employee worked a different number of hours than the employee indicated, the payroll checker must: a) contact the employee and ask for clarification; and b) request the contractor's actual time records. This should be done without revealing the identity of the employee, e.g. by asking for all employee records for one work week.

EMPLOYEE INTERVIEW FOR DAVIS-BACON LABOR STANDARDS

1a. Project Name		2a. Employee Name	
1b. Contract Number	Wage Decision and Date	2b. Employee Phone Number	
1c. Name of Prime Contractor		2c. Employee Home Address and Zip Code	
1d. Name of Employer and Supervisor			
3a. Hourly rate of pay on this project:	4. Do you know that you are working on a federally-funded project and that you are to be paid wages set by DOL (Davis-Bacon wages)? Y ☐ N ☐	5. Do you know where the Davis-Bacon Wage Rate Decision for this project is posted? Y ☐ N ☐	6. Do you know where the "Employee Rights under the Davis-Bacon Act" poster is posted? Y ☐ N ☐
3b. Do you have your most recent paystub? Y ☐ N ☐			
7a. Do you ever work over 8 hours per day? Y ☐ N ☐	7b. Do you ever work over 40 hours per week? Y ☐ N ☐	7c. Are you paid at least time and a half for overtime hours? Y ☐ N ☐ N/A ☐	8. Do you receive Fringe Benefits? Vacation Y ☐ N ☐ Medical Y ☐ N ☐ Pension Y ☐ N ☐ Cash/pay Y ☐ N ☐ Other:
9a. Date you began work on this project:	9b. Date of last work day on this project before interview:	9c. How many hours did you work on your last work day before this interview on this job?	
10. What deductions other than taxes and social security are made from your pay?		11. Work Classification (list all on this project):	
12. Your duties on this project:		13. Tools and equipment you use on this project:	

THE ABOVE IS CORRECT TO THE BEST OF MY KNOWLEDGE

14. Employee Signature	Date	
15. Interviewer Signature	Interviewer Name	Date

INTERVIEWER'S COMMENTS

16. Work employee was doing/tools employee was using when interviewed:	17. Is employee properly classified and paid? Y ☐ N ☐	18. Are wage rate and poster displayed? Y ☐ N ☐
	19. Wage Rate Decision Number:	20. Wage Rate Decision Date:

FOR USE BY PAYROLL CHECKER

21. Is above information in agreement with payroll data? Y ☐ N ☐	22. If no, provide explanation and resolution:	
23. Payroll Checker Signature	Payroll Checker Name	Date

SAMPLE Step Certification Letter (Processed/Manufactured)
Use of American Iron and Steel
Water Infrastructure Finance Authority of Arizona
CWSRF and DWSRF Funded Projects

The following information is provided as a sample letter of certification for AIS compliance (From March 20, 2014 EPA Memorandum American Iron and Steel Requirement Guidance).

Documentation must be provided on company letterhead.

Documentation should include the following five items:

- *Project name*
- *Product identification*
- *City and state where process took place*
- *Reference to American Iron and Steel Requirements as mandated by the EPA State Revolving Fund Programs.*
- *Signature*

Date

Company Name

Company Address

City, State Zip

Subject: American Iron and Steel Step Certification for Project (xxxxx)

I, (company representative), certify that the (melting, bending, coating, galvanizing, cutting, etc.) process for (manufacturing or fabricating) the following products and/or materials shipped or provided for the subject project is in full compliance with the American Iron and Steel requirement as mandated in EPA's State Revolving Fund Programs.

Item, Products and/or Materials:

1. xxxx
2. xxxx
3. xxxx

Such process took place at the following location: _CITY AND STATE_____

If any of the above compliance statements change while providing material to this project we will immediately notify the prime contractor and the Public Works Director, or designee.

Signed by company representative

SAMPLE Step Certification Letter ((Shipped//Provided))
Use of American Iron and Steel
Water Infrastructure Finance Authority of Arizona
CWSRF and DWSRF Funded Projects

The following information is provided as a sample letter of certification for AIS compliance (From March 20, 2014 EPA Memorandum American Iron and Steel Requirement Guidance).

Documentation must be provided on company letterhead.

Documentation should include the following five items:

- *Project name*
- *Product identification*
- *City and state where process took place*
- *Reference to American Iron and Steel Requirements as mandated by the EPA State Revolving Fund Programs.*
- *Signature*

Date

Company Name

Company Address

City, State Zip

Subject: American Iron and Steel Certification for Project (xxxxx)

I, (company representative), certify that the following products and/or materials shipped/provided to the subject project are in full compliance with the American Iron and Steel requirement as mandated in EPA's State Revolving Fund Programs.

Item, Products and/or Materials:
1. xxxx
2. xxxx
3. xxxx

Such process took place at the following location: CITY AND STATE

If any of the above compliance statements change while providing material to this project we will immediately notify the prime contractor and the Public Works Director, or designee.

Signed by company representative

Guidance Document Viewer

De Minimis Exemption

Go to: De Minimis Exemption

On this page:

Section 1: Regulatory Text
Section 2: Summary
Section 3: Examples
Section 4: Questions and Answers

Section 1: Regulatory Text %

40 CFR §372.38(a):

> *"De minimis concentrations of a toxic chemical in a mixture. If a toxic chemical is present in a mixture of chemicals at a covered facility and the toxic chemical is in a concentration in the mixture which is below 1 percent of the mixture, or 0.1 percent of the mixture in the case of a toxic chemical which is a carcinogen as de.ftned in 29 CFR 1910.1200(d)(4), a person is not required to consider the quantity of the toxic chemical present in such mixture when determining whether an applicable threshold has been met under §372.25 or determining the amount of release to be reported under §372.30. This exemption applies whether the person received the mixture from another person or the person produced the mixture, either by mixing the chemicals involved or by causing a chemical reaction which resulted in the creation of the toxic chemical in the mixture. However, this exemption applies only to the quantity of the toxic chemical present in the mixture. If the toxic chemical is also manufactured (including imported), processed, or otherwise used at the covered facility other than as part of the mixture or in a mixture at higher concentrations, in excess of an applicable threshold quantity set forth in §372.25, the person is required to report under §372.30. This exemption does not apply to toxic chemicals listed in §372.28, except for purposes of §372.45(d)(1)."*

Section 2: Summary %

The de minimis exemption allows covered facilities to disregard certain minimal concentrations of non-PBT chemicals in mixtures or trade name products. The de minimis exemption does not apply to the manufacture of a non-PBT chemical except if that toxic chemical is manufactured as an impurity and remains in the product distributed in commerce, or if the toxic chemical is imported below the appropriate de minimis level. The de minimis exemption does not apply to a byproduct manufactured coincidentally as a result of manufacturing, processing, otherwise use, or any waste management activities.

When determining whether the de minimis exemption applies to a listed non-PBT chemical, the owner/operator should consider only the concentration of the non-PBT chemical in mixtures and trade name products. If the non-PBT chemical is manufactured as an impurity, imported, processed, or otherwise used and is below the appropriate de minimis concentration level, then the quantity of the toxic chemical in that process stream does not have to be applied to threshold determinations nor included in release or other waste management calculations. If a non-PBT chemical in a mixture or trade name product is below the appropriate de minimis level, all releases and other waste management activities associated with the toxic chemical in the mixture or trade name product are exempt from EPCRA Section 313 reporting. It is possible to meet an activity (e.g., processing) threshold for a toxic chemical on a facility-wide basis, but not be required to calculate releases or other waste management quantities associated with a particular process because that process involves only mixtures or trade name products containing the toxic chemical below the de minimis level.

Once a non-PBT chemical concentration is above the appropriate de minimis level in mixture or trade name product, threshold determinations and release and other waste management calculations must be made, even if the chemical later falls below the de minimis level in the same mixture or trade name prodct. Thus, all releases and other quantities managed as waste that occur after the de minimis level has been exceeded are subject to reporting. If a non-PBT chemical in a mixture or trade name product above de minimis is brought on-site, the de minimis exemption never applies.

The 0.1 percent de minimis levels are dictated by determinations made by the National Toxicology Program (NTP), Annual Report on Carcinogens, the International Agency for Research and Cancer (IARC) ADDENDUM EPCRA Section 313 Questions and Answers Addendum 32 Monographs, or 29 CFR part 1910, subpart Z. Therefore, once a chemicals status under NTP, IARC, or 29 CFR part 1910, subpart Z indicates that the chemical is a carcinogen or potential carcinogen, the reporting facility may disregard levels of the chemical below the 0.1 percent de minimis concentration provided that the other criteria for the de minimis exemption is met. De minimis levels for chemical categories apply to the total concentration of all chemicals in the category within a mixture, not the concentration of each individual category member within the mixture. All other listed toxic chemicals have a one percent (1.0 percent) de minimis level.

Section 2.1: De Minimis Application to the Processing or Otherwise Use of a Mixture %

The de minimis exemption applies to the processing or otherwise using, of a listed non-PBT chemical in a mixture. Threshold determinations and release and other waste management calculations begin at the point where the chemical exceeds de minimis. If a listed non-PBT chemical is present in a mixture at a concentration below the de minimis level, this quantity of the substance does not

have to be included for threshold determination, release and other waste management reporting. The exemption will apply as long as the mixture containing de minimis amounts of a non-PBT chemical never goes above the de minimis limit. Also, see the two examples below in which a manufacturing activity would qualify for the de minimis exemption.

Section 2.1.1: Examples of Process and Otherwise Use Scenarios %

There are many cases in which the de minimis limit is crossed or recrossed within a process or otherwise use scenario. The following examples are meant to illuminate these complex reporting scenarios. These applications are further described in the general section of the Toxic Chemical Release Inventory Reporting Forms and Instructions.

Section 2.1.1.1: A. Example of Increasing Process Concentration to Above De Minimis Levels %

A manufacturing facility receives toluene which contains less than the de minimis concentration of chlorobenzene. Through distillation, the chlorobenzene content in process streams is increased over the de minimis concentration of 1 percent. From the point at which the chlorobenzene concentration exceeds 1 percent in process streams, the amount present must be factored into threshold determinations and release and other waste management calculations. The facility does not need to consider the amount of chlorobenzene in the raw material, i.e., when below de minimis levels, when making threshold determinations. The facility does not have to report emissions of chlorobenzene from storage tanks or any other equipment where the chlorobenzene content is less than 1 percent.

Section 2.1.1.2: B. Example of Fluctuating Process Concentration %

A manufacturer produces an ink product which contains toluene, a listed toxic chemical below the de minimis level. The process used causes the percentage of toluene in the mixture to fluctuate: it rises above the de minimis level for a time but drops below the level as the process winds down. The facility must consider the chemical toward threshold determinations from the point at which it first exceeds the de minimis limit. Once the de minimis limit has been crossed the exemption cannot be taken.

Section 2.1.1.3: C. Example of Concentration Levels that Straddle the De minimis Level %

A facility processes 9,500,000 lbs. of mixtures containing 0.25-1.25 percent manganese. Manganese is subject to 1 percent de minimis concentration exemption. The amount of mixture subject to reporting is:

9,500,000 x (1.2 - 0.99)/(1.2 - 0.25) = 2,000,000 lbs. non-exempt mixture

The average concentration above de minimis is 1.1 percent.

2,900,000 x 0.011 manganese = 22,000 lbs manganese (below threshold)

In this example, because the facility's information pertaining to the toxic chemical is available to two digits past the decimal point, the facility used 0.99 to determine the amount of the toxic chemical below the de minimis level. If the facility has information pertaining to the chemical that is available only to one digit past the decimal point, the facility should use 0.9.

Section 2.2: De Minimis Application in the Manufacture of the Listed Chemical in a Mixture %

De Minimis Application in the Manufacture of the Listed Chemical in a Mixture The de minimis exemption generally does not apply to the manufacture of a non-PBT chemical. The de minimis exemption may apply to mixtures and trade name products containing non-PBT chemicals that are imported into the United States. Another exception applies to non-PBT chemicals that are coincidentally manufactured as impurities that remain in the product distributed in commerce at below the de minimis levels. In that case, the amount remaining in the product is exempt from threshold determinations. If the non-PBT chemical is separated from the final product, thereby classifying the chemical as a byproduct, it cannot qualify for the exemption. Any amount that is separated, or is separate from the product, is considered a byproduct and is subject to threshold determinations and release and other waste management calculations. Any amount of a toxic chemical that is manufactured in a wastestream must be accounted for on the Form R.

Section 2.2.1: Examples of Coincidental Manufacture Scenarios %

Section 2.2.1.1: A. Example of Coincidental Manufacture as a Product Impurity %

Toluene 2,4-diisocyanate reacts with water to form trace quantities of 2,4-diaminotoluene. The resulting product contains 99 percent toluene 2,4-diisocyanate and 0.05 percent 2,4-diaminotoluene. The 2,4-diaminotoluene would not be subject to Section 313 reporting nor would supplier notification be required because the concentration of 2,4-diaminotoluene is below its de minimis concentration of 0.1 percent in the product. Coincidental manufacture/production refers only to production of a chemical via a chemical reaction. It would not include separation of a byproduct from a purchased mixture during a processing operation.

Section 2.2.1.2: B. Example of Coincidental Manufacture as a Commercial Byproduct and Impurity %

Chloroform is a reaction byproduct in the production of carbon tetrachloride. It is removed by distillation to a concentration of less than 150 ppm (0.0150 percent) remaining in the carbon tetrachloride. The separated chloroform at 90 percent concentration is sold as a byproduct. Chloroform is subject to a 0.1 percent (1,000 ppm) de minimis level. Any amount of chloroform manufactured and separated as byproduct must be included in threshold determinations because the de minimis exemption does not apply to manufacture of a chemical byproduct. Releases of chloroform prior to and during purification of the carbon tetrachloride should be reported. The de minimis level can, however, be applied to the chloroform remaining in the carbon tetrachloride as an impurity. Because the concentration of chloroform remaining in the carbon tetrachloride is below the de minimis level, this quantity of chloroform is exempt from threshold determinations, release and other waste management reporting, and supplier notification.

Section 2.2.1.3: C. Example of Coincidental Manufacture as a Waste Byproduct %

A small amount of formaldehyde is manufactured as a reaction byproduct during the production of phthalic anhydride. The formaldehyde is separated from the phthalic anhydride as a waste gas and burned, leaving no formaldehyde in the phthalic anhydride. The amount of formaldehyde produced and removed as waste must be included in threshold determinations and release and other waste management calculations even if the formaldehyde is present below the de minimis level in the process stream where it was manufactured or in the wastestream which it was separated.

The de minimis exemption also does not apply to situations where the manufactured chemical is released or transferred to wastestreams and thereby diluted to below the de minimis level.

Section 2.3: De Minimis Levels Impact Supplier Notification Requirements %

If the toxic chemical in a mixture or trade name product is present below the de minimis level for that toxic chemical, supplier notification is not required for that chemical regardless of whether or not it is a PBT chemical.

Section 3: Examples %

Example 5: De Minimis Applications to Process and Otherwise Use Scenarios for Non-PBT Chemicals

Example 5: De Minimis Applications to Process and Otherwise Use Scenarios for Non-PBT Chemicals

There are many cases in which the *de minimis* "limit" is crossed or re-crossed by non-PBT chemicals within a process or otherwise use scenario. The following examples are meant to illustrate these complex reporting scenarios.

Increasing Concentration to or Above *De Minimis* Levels During Processing for Non-PBT Chemicals

A manufacturing facility receives toluene that contains chlorobenzene at a concentration below its *de minimis* limit. Through distillation, the chlorobenzene content in process streams is increased over the *de minimis* concentration of 1 percent. From the point at which the chlorobenzene concentration equals 1 percent in process streams, the amount present must be factored into threshold determinations and release and other waste management estimates. The facility does not need to consider the amount of chlorobenzene in the raw material when below *de minimis* levels, i.e., prior to distillation to 1 percent, when making threshold determinations. The facility does not have to report emissions of chlorobenzene from storage tanks or any other equipment associated with that specific process where the chlorobenzene content is less than 1 percent.

Fluctuating Concentration During Processing for Non-PBT Chemicals

A manufacturer produces an ink product that contains toluene, an EPCRA Section 313 chemical, below the de minimis level. The process used causes the percentage of toluene in the mixture to fluctuate: it rises above the *de minimis* level for a time but drops below the level as the process winds down. The facility must consider the chemical toward threshold determinations from the point at which it first equals the *de minimis* limit. Once the de minimis limit has been met the exemption cannot be taken.

Example 6: Concentration Ranges Straddling the De Minimis Value

Example 6: Concentration Ranges Straddling the De Minimis Value

Scenario 1: A facility processes 8,000,000 pounds of a mixture containing 0.25 to 1.25 percent manganese. Manganese is eligible for the *de minimis* exemption at concentrations up to 1 percent. The amount of mixture subject to reporting is the quantity containing manganese at or above the *de minimis* concentration:

1(8,000,000) x (1.25% - 0.99%)I + (1.25% - 0.25%)

The average concentration of manganese that is not exempt (above the *de minimis*) is:

(1.25% + 1.00%) + (2)

Therefore, the amount of manganese that is subject to threshold determination and release and other waste management estimates is:

$$\left[\frac{(8{,}000{,}000)\times(1.25\%-0.99\%)}{(1.25\%-0.25\%)}\right]\times\left[\frac{(1.25\%+1.00\%)}{(2)}\right]=23{,}400\,pounds$$

= 23,400 pounds manganese (which is below the processing threshold for manganese)

In this scenario, because the facility's information pertaining to manganese was available to two decimal places, 0.99 was used to determine the amount below the *de minimis* concentrations. If the information was available to one decimal place, 0.9 should be used, as in the scenario below.

Scenario 2: As in the previous example, manganese is present in a mixture, of which 8,000,000 pounds is processed. The SDS states the mixture contains 0.2 percent to 1.2 percent manganese. The amount of mixture subject to reporting (at or above *de minimis* limit) is:

1(8,000,000) x (1.2% - 0.9%)I + (1.2% - 0.2%)

The average concentration of manganese that is not exempt (at or above *de minimis* limit) is:

(1.2% + 1.0%) + (2)

Therefore, the amount of manganese that is subject to threshold determinations and release and other waste management estimates is:

$$\left[\frac{(8{,}000{,}000)\times(1.2\%-0.9\%)}{(1.2\%-0.2\%)}\right]\times\left[\frac{(1.2\%+1.0\%)}{(2)}\right]=26{,}400\,pounds$$

= 26,400 pounds manganese (which is above the processing threshold for manganese)

Example 6: Concentration Ranges Straddling the De Minimis Value

Example 7: De Minimis Application in the Manufacture of a Toxic Chemical in a Mixture

Manufacture as a Product Impurity

Toluene 2,4 diisocyanate reacts with trace amounts of water to form trace quantities of 2,4-diaminotoluene. The resulting product contains 99 percent toluene 2,4-diisocyanate and 0.05 percent 2,4-diaminotoluene. The 2,4 diaminotoluene would not be subject to EPCRA Section 313 reporting nor would supplier notification be required because the concentration of 2,4- diaminotoluene is below its *de minimis* limit of 0.1 percent in the product.

Manufacture as a Commercial Byproduct and Impurity

Chloroform is a reaction byproduct in the production of carbon tetrachloride. It is removed by distillation to a concentration of less than 150 ppm (0.0150 percent) remaining in the carbon tetrachloride. The separated chloroform at 90 percent concentration is sold as a byproduct. Chloroform is subject to a 0.1 percent (1000 ppm) *de minimis* limit. Any amount of chloroform manufactured and separated as byproduct must be included in threshold determinations because EPA does not interpret the *de minimis* exemption to apply to the manufacture of a chemical as a byproduct. Releases of chloroform prior to and during purification of the carbon tetrachloride must be reported. The *de minimis* exemption can, however, be applied to the chloroform remaining in the carbon tetrachloride as an impurity. Because the concentration of chloroform remaining in the carbon tetrachloride is below the *de minimis* limit, this quantity of chloroform is exempt from threshold determinations, release and other waste management reporting, and supplier notification.

Manufacture as a Waste Byproduct

A small amount of formaldehyde is manufactured as a reaction byproduct during the production of phthalic anhydride. The formaldehyde is separated from the phthalic anhydride as a waste gas and burned, leaving no formaldehyde in the phthalic anhydride. The amount of formaldehyde produced and removed must be included in threshold determinations and release and other waste management estimates even if the formaldehyde were present below the *de minimis* level in the process stream where it was manufactured or in the waste stream to which it was separated because EPA does not interpret mixtures and trade name products to includes wastes.

Section 4: Questions and Answers %

TEST

When *de minimis* may Apply (Q&A #)	When *de minimis* does not Apply (Q&A #)
• Question Number 246: Impurity; Process • Question Number 265: De minimis Exemption; Solvent Recovery • Question Number 299: Otherwise Use • Question Number 410: De minimis Exemption; Mixture; Trade Name • Question Number 413: De minimis Exemption; Release Reporting • Question Number 430: Ash; De minimis Exemption; Otherwise Use • Question Number 433: De minimis Exemption; Waste • Question Number 434: Ash; De minimis • Question Number 593: Release Reporting; Releases; Storage	• Question Number 248: Activity Threshold; Coincidental Manufacturing • Question Number 265: De minimis Exemption; Solvent Recovery • Question Number 410: De minimis Exemption; Mixture; Trade Name • Question Number 412: Coincidental Manufacturing; De minimis Exemption; Impurity • Question Number 423: De minimis Exemption; Manufacture; Threshold Determination; Wastewater Treatment • Question Number 425: Ammonia; De minimis Exemption • Question Number 427: De minimis Exemption • Question Number 429: De minimis Exemption; Otherwise Use; Waste Stream • Question Number 435: De minimis Exemption; Waste • Question Number 492: Air Releases; De minimis Exemption; Storage Tanks • Question Number 594: Otherwise Use

No Previous Section I Table of Contents I Guidance Document List I No Next Section

SECTION D

WAGE RATE DECISION

CITY OF NOGALES

ROYAL ROAD WATER MAIN REPLACEMENT

"General Decision Number: AZ20220036 10/07/2022

Superseded General Decision Number: AZ20210036

State: Arizona

Construction Type: Heavy

County: Santa Cruz County in Arizona.

HEAVY CONSTRUCTION, Includes Water and Sewer Lines, Heavy Construction on Treatment Plant Sites and Pipeline Construction

Note: Contracts subject to the Davis-Bacon Act are generally required to pay at least the applicable minimum wage rate required under Executive Order 14026 or Executive Order 13658. Please note that these Executive Orders apply to covered contracts entered into by the federal government that are subject to the Davis-Bacon Act itself, but do not apply to contracts subject only to the Davis-Bacon Related Acts, including those set forth at 29 CFR 5.1(a)(2)-(60).

If the contract is entered into on or after January 30, 2022, or the contract is renewed or extended (e.g., an option is exercised) on or after January 30, 2022:	. Executive Order 14026 generally applies to the contract. . The contractor must pay all covered workers at least $15.00 per hour (or the applicable wage rate listed on this wage determination, if it is higher) for all hours spent performing on the contract in 2022.
If the contract was awarded on or between January 1, 2015 and January 29, 2022, and the contract is not renewed or extended on or after January 30, 2022:	. Executive Order 13658 generally applies to the contract. . The contractor must pay all covered workers at least $11.25 per hour (or the applicable wage rate listed on this wage determination, if it is higher) for all hours spent performing on that contract in 2022.

The applicable Executive Order minimum wage rate will be adjusted annually. If this contract is covered by one of the Executive Orders and a classification considered necessary for performance of work on the contract does not appear on this wage determination, the contractor must still submit a conformance request.

Additional information on contractor requirements and worker protections under the Executive Orders is available at https://www.dol.gov/agencies/whd/government-contracts.

Modification Number	Publication Date
0	01/07/2022
1	02/25/2022

```
          2              04/29/2022
          3              06/10/2022
          4              10/07/2022

 BOIL0627-004 01/01/2021

                                  Rates          Fringes

BOILERMAKER......................$ 36.07           30.59
----------------------------------------------------------------
 ELEC0570-005 06/01/2022

                                  Rates          Fringes

ELECTRICIAN......................$ 29.93         18%+6.00

ZONE DEFINITIONS-

  Zone A:  the area within a thirty-nine (39) mile radius from
  a base point at the Tucson Town Hall.
  Zone B: 40 to 74 mile radius from the town hall in Tucson- an
  additional $ 3.50 per hour
  Zone C: 75 mile radius from the town hall in Tucson to the
  outer limits of the geographic jurisdiction- an additional
  $ 7.50 per hour

--------------------------------------------------------------------
* IRON0075-005 08/01/2022

                                  Rates          Fringes

IRONWORKER, STRUCTURAL...........$ 28.50           18.16
----------------------------------------------------------------
 LABO1184-011 06/01/2021

                                  Rates          Fringes

LABORER
     GROUP 4
      Jackhammer................$ 25.40            6.27
----------------------------------------------------------------
  SUAZ2012-025 05/17/2012

                                  Rates          Fringes

LABORER:  Common or General......$ 15.65             0.00

LABORER:  Pipelayer..............$  20.00             0.00

OPERATOR:  Loader (Front End)....$ 20.23             6.31

OPERATOR:
Backhoe/Excavator/Trackhoe.......$  22.70             0.00

TRUCKDRIVER......................$  21.00             0.00
--------------------------------------------------------------------

WELDERS - Receive rate prescribed for craft performing
operation to which welding is incidental.

====================================================================

Note: Executive Order (EO) 13706, Establishing Paid Sick Leave
for Federal Contractors applies to all contracts subject to the
Davis-Bacon Act for which the contract is awarded (and any
```

solicitation was issued) on or after January 1, 2017. If this contract is covered by the EO, the contractor must provide employees with 1 hour of paid sick leave for every 30 hours they work, up to 56 hours of paid sick leave each year. Employees must be permitted to use paid sick leave for their own illness, injury or other health-related needs, including preventive care; to assist a family member (or person who is like family to the employee) who is ill, injured, or has other health-related needs, including preventive care; or for reasons resulting from, or to assist a family member (or person who is like family to the employee) who is a victim of, domestic violence, sexual assault, or stalking. Additional information on contractor requirements and worker protections under the EO is available at https://www.dol.gov/agencies/whd/government-contracts.

Unlisted classifications needed for work not included within the scope of the classifications listed may be added after award only as provided in the labor standards contract clauses (29CFR 5.5 (a) (1) (ii)).

The body of each wage determination lists the classification and wage rates that have been found to be prevailing for the cited type(s) of construction in the area covered by the wage determination. The classifications are listed in alphabetical order of ""identifiers"" that indicate whether the particular rate is a union rate (current union negotiated rate for local), a survey rate (weighted average rate) or a union average rate (weighted union average rate).

Union Rate Identifiers

A four letter classification abbreviation identifier enclosed in dotted lines beginning with characters other than ""SU"" or ""UAVG"" denotes that the union classification and rate were prevailing for that classification in the survey. Example: PLUM0198-005 07/01/2014. PLUM is an abbreviation identifier of the union which prevailed in the survey for this classification, which in this example would be Plumbers. 0198 indicates the local union number or district council number where applicable, i.e., Plumbers Local 0198. The next number, 005 in the example, is an internal number used in processing the wage determination. 07/01/2014 is the effective date of the most current negotiated rate, which in this example is July 1, 2014.

Union prevailing wage rates are updated to reflect all rate changes in the collective bargaining agreement (CBA) governing this classification and rate.

Survey Rate Identifiers

Classifications listed under the ""SU"" identifier indicate that no one rate prevailed for this classification in the survey and the published rate is derived by computing a weighted average rate based on all the rates reported in the survey for that classification. As this weighted average rate includes all rates reported in the survey, it may include both union and non-union rates. Example: SULA2012-007 5/13/2014. SU indicates the rates are survey rates based on a weighted average calculation of rates and are not majority rates. LA indicates

the State of Louisiana. 2012 is the year of survey on which these classifications and rates are based. The next number, 007 in the example, is an internal number used in producing the wage determination. 5/13/2014 indicates the survey completion date for the classifications and rates under that identifier.

Survey wage rates are not updated and remain in effect until a new survey is conducted.

Union Average Rate Identifiers

Classification(s) listed under the UAVG identifier indicate that no single majority rate prevailed for those classifications; however, 100% of the data reported for the classifications was union data. EXAMPLE: UAVG-OH-0010 08/29/2014. UAVG indicates that the rate is a weighted union average rate. OH indicates the state. The next number, 0010 in the example, is an internal number used in producing the wage determination. 08/29/2014 indicates the survey completion date for the classifications and rates under that identifier.

A UAVG rate will be updated once a year, usually in January of each year, to reflect a weighted average of the current negotiated/CBA rate of the union locals from which the rate is based.

WAGE DETERMINATION APPEALS PROCESS

1.) Has there been an initial decision in the matter? This can be:

* an existing published wage determination
* a survey underlying a wage determination
* a Wage and Hour Division letter setting forth a position on a wage determination matter
* a conformance (additional classification and rate) ruling

On survey related matters, initial contact, including requests for summaries of surveys, should be with the Wage and Hour National Office because National Office has responsibility for the Davis-Bacon survey program. If the response from this initial contact is not satisfactory, then the process described in 2.) and 3.) should be followed.

With regard to any other matter not yet ripe for the formal process described here, initial contact should be with the Branch of Construction Wage Determinations. Write to:

Branch of Construction Wage Determinations
Wage and Hour Division
U.S. Department of Labor
200 Constitution Avenue, N.W.
Washington, DC 20210

2.) If the answer to the question in 1.) is yes, then an interested party (those affected by the action) can request review and reconsideration from the Wage and Hour Administrator (See 29 CFR Part 1.8 and 29 CFR Part 7). Write to:

Wage and Hour Administrator
U.S. Department of Labor

200 Constitution Avenue, N.W.
Washington, DC 20210

The request should be accompanied by a full statement of the interested party's position and by any information (wage payment data, project description, area practice material, etc.) that the requestor considers relevant to the issue.

3.) If the decision of the Administrator is not favorable, an interested party may appeal directly to the Administrative Review Board (formerly the Wage Appeals Board). Write to:

Administrative Review Board
U.S. Department of Labor
200 Constitution Avenue, N.W.
Washington, DC 20210

4.) All decisions by the Administrative Review Board are final.

==========

END OF GENERAL DECISIO"

SECTION E

ENVIRONMENTAL CONDITIONS

CITY OF NOGALES
ROYAL ROAD WATER MAIN
REPLACEMENT

City of Nogales
Royal Road Water Main Replacement

ENVIRONMENTAL CONDITIONS

1. Mitigation Measures:

a. Pursuant to ARS §41-865, if any remains or funerary objects are inadvertently uncovered as a result of this project, all work must cease within the area of the remains and the Curator of Archeology, Arizona State Museum (ASM), must be contacted immediately, as well as, notification made to other appropriate agencies.

b. If any cultural features or deposits are encountered (i.e. village ruins or religious resources including burial grounds) during ground disturbance, work will cease and a qualified archaeologist will be consulted to evaluated the nature and significance of the find, as well as notification to the appropriate Tribes, State Historic Preservation Office, and ASM.

c. Mitigation measures, as applicable, to reduce dust during construction of the project will be included in the construction contract, required by ADEQ, Air Quality Department:

(1) Site Preparation and Construction -
- (a) minimize land disturbance;
- (b) suppress dust on traveled paths which are not paved through wetting down the area, using water trucks, chemical dust suppressants, or other reasonable precautions to prevent dust entering ambient air;
- (c) cover trucks when hauling soil;
- (d) minimize soil track-out by washing or cleaning truck wheels before leaving construction site;
- (e) stabilize the surface of soil piles, if not removed immediately; and
- (f) create windbreaks.

(2) Site Restoration -
- (a) revegetate any disturbed land not used;
- (b) remove unused material; and
- (c) remove soil piles via covered trucks.

(4) Follow the attached ADEQ Arizona Administrative Code for reducing dust during construction, demolition and earth moving activities.

d. Mitigation measures to reduce noise during construction of the project are included in the construction contract.

2. Required Permits:

All land disturbances of one acre or more require a Construction Stormwater Notice of Intent (NOI) permit from ADEQ, which must be filed on the Internet at http://az.gov/webapp/noi/main.do by the contractor before construction can begin. Per ADEQ, this project is subject to Cochise County Floodplain Regulations.

3. Endangered Species:

It has been determined there will be no impact to endangered species.

4. Native Plant Protection:

If this project results in the disturbance of over 0.25 acres of land, it will be subject to Arizona Native Plant Regulations.

ATTACHMENT

R18-2-604. Open Areas, Dry Washes, or Riverbeds

A. No person shall cause, suffer, allow, or permit a building or its appurtenances, or building or subdivision site, or a driveway, or a parking area, or a vacant lot or sales lot, or an urban or suburban open area to be constructed, used, altered, repaired, demolished, cleared, or leveled, or the earth to be moved or excavated, without taking reasonable precautions to limit excessive amounts of particulate matter from becoming airborne. Dust and other types of air contaminants shall be kept to a minimum by good modern practices such as using an approved dust suppressant or adhesive soil stabilizer, paving, covering, landscaping, continuous wetting, detouring, barring access, or other acceptable means.

B. No person shall cause, suffer, allow, or permit a vacant lot, or an urban or suburban open area, to be driven over or used by motor vehicles, trucks, cars, cycles, bikes, or buggies, or by animals such as horses, without taking reasonable precautions to limit excessive amounts of particulates from becoming airborne. Dust shall be kept to a minimum by using an approved dust suppressant, or adhesive soil stabilizer, or by paving, or by barring access to the property, or by other acceptable means.

C. No person shall operate a motor vehicle for recreational purposes in a dry wash, riverbed or open area in such a way as to cause or contribute to visible dust emissions which then cross property lines into a residential, recreational, institutional, educational, retail sales, hotel or business premises. For purposes of this subsection "motor vehicles" shall include, but not be limited to trucks, cars, cycles, bikes, buggies and 3-wheelers. Any person who violated the provisions of this subsection shall be subject to prosecution under A.R.S.§ 49-463.

Historical Note

Adopted effective May 14, 1979 (Supp. 79-1). Former Section R9-3-604 renumbered without change as Section R18-2-604
(Supp. 87-3). Amended effective September 26, 1990 (Supp. 90-3). Former Section R18-2-604 renumbered to R18-2-804,
new Section R18-2-604 renumbered from R18-2-404 and amended effective November 15, 1993 (Supp. 93-4).

R18-2-605. Roadways and Streets

A. No person shall cause, suffer, allow or permit the use, repair, construction or reconstruction of a roadway or alley without taking reasonable precautions to prevent excessive amounts of particulate matter from becoming airborne. Dust and other particulates shall be kept to a minimum by employing temporary paving, dust suppressants, wetting down, detouring or by other reasonable means.

B. No person shall cause, suffer, allow or permit transportation of materials likely to give rise to airborne dust without taking reasonable precautions, such as wetting, applying dust suppressants, or covering the load, to prevent particulate matter from becoming airborne. Earth or other material that is deposited by trucking or earth moving equipment shall be removed from paved streets by the person responsible for such deposits.

Historical Note

Adopted effective May 14, 1979 (Supp. 79-1). Former Section R9-3-605 renumbered without change as Section R18-2-605
(Supp. 87-3). Amended effective September 26, 1990 (Supp. 90-3). Former Section R18-2-605 renumbered to R18-2-805,
new Section R18-2-605 renumbered from R18-2-405 effective November 15, 1993 (Supp. 93-4).

R18-2-606. Material Handling

No person shall cause, suffer, allow or permit crushing, screening, handling, transporting or conveying of materials or other operations likely to result in significant amounts of airborne dust without taking reasonable precautions, such as the use of spray bars, wetting agents, dust suppressants, covering the load, and hoods to prevent excessive amounts of particulate matter from becoming airborne.

Historical Note

Section R18-2-606 renumbered from R18-2-406 effective November 15, 1993 (Supp. 93-4).

R18-2-607. Storage Piles

A. No person shall cause, suffer, allow, or permit organic or inorganic dust producing material to be stacked, piled, or otherwise stored without taking reasonable precautions such as chemical stabilization, wetting, or covering to prevent excessive amounts or particulate matter from becoming airborne.

B. Stacking and reclaiming machinery utilized at storage piles shall be operated at all times with a minimum fall or material and in such manner, or with the use of spray bars and wetting agents, as to prevent excessive amounts of particulate matter from becoming airborne.

R18-2-804. Roadway and Site Cleaning Machinery

A. No person shall cause, allow or permit to be emitted into the atmosphere from any roadway and site cleaning machinery smoke or dust for any period greater than 10 consecutive seconds, the opaCounty of which exceeds 40%. Visible emissions when starting cold equipment shall be exempt from this requirement for the first 10 minutes.

B. In addition to complying with subsection (A), no person shall cause, allow or permit the cleaning of any site, roadway, or alley without taking reasonable precautions to prevent particulate matter from becoming airborne. Reasonable precautions may include applying dust suppressants. Earth or other material shall be removed from paved streets onto which earth or other material has been transported by trucking or earth moving equipment, erosion by water or by other means.

Historical Note

Adopted effective February 26, 1988 (Supp. 88-1). Amended effective September 26, 1990 (Supp. 90-3). Amended effective
February 3, 1993 (Supp. 93-1). Former Section R18-2-804 renumbered to Section R18-2-904, new Section R18-2-804 renumbered from R18-2-604 effective November 15, 1993 (Supp. 93-4).

SECTION D

WGAR INYS

CITF OD NOY ALES
GOFAL GOAWR ATEG MAIN GEPLACEMENT

WATER MAIN REPLACEMENT

ROYAL ROAD

CITY OF NOGALES

SANTA CRUZ COUNTY, ARIZONA

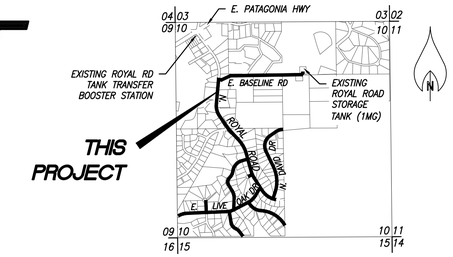

LOCATION MAP

A PORTION OF THE NW 1/4 & SW 1/4 OF
SECTION 10, T24S, R14E
G&S.R.M., SANTA CRUZ COUNTY, ARIZONA
LATITUDE 31°21'22"N. LONGITUDE 110°54'18"W
SCALE: 3"=1 MILE

SHEET INDEX

SHEET NO.	DESCRIPTION
1	COVER, INDEX & LOCATION MAP
2	NOTES, LEGEND & ABBREVIATIONS
3	MATERIAL QUANTITIES SUMMARY
4	HORIZONTAL CONTROL ROYAL ROAD
5	HORIZONTAL CONTROL ROYAL ROAD (CONT'D)
6	HORIZONTAL CONTROL DUNCAN DRIVE
7	HORIZONTAL CONTROL LIVE OAK DRIVE
8	HORIZONTAL CONTROL DAVID DRIVE
9	HORIZONTAL CONTROL SILVER LODE TRAIL
10	HORIZONTAL CONTROL MAHEN ROAD & VENTANA COURT
11	HORIZONTAL CONTROL STORAGE TANK WATERLINE
12	ROYAL ROAD
13	ROYAL ROAD
14	ROYAL ROAD
15	ROYAL ROAD
16	DUNCAN ROAD
17	DUNCAN ROAD
18	LIVE OAK DRIVE
19	LIVE OAK DRIVE
20	LIVE OAK DRIVE
21	DAVID DRIVE
22	DAVID DRIVE
23	SILVER LODE TRAIL
24	VENTANA COURT
25	STORAGE TANK WATERLINE PLAN & PROFILE
26	STORAGE TANK WATERLINE PLAN & PROFILE
27	STORM & SEWER CROSSING PROFILES
28	STORM & SEWER CROSSING PROFILES
29	SEWER CROSSING PROFILE AND WATER CROSSING DETAIL
30	PAVEMENT REPLACEMENT
31	DETAIL SHEET
32	DETAIL SHEET
33	DETAIL SHEET

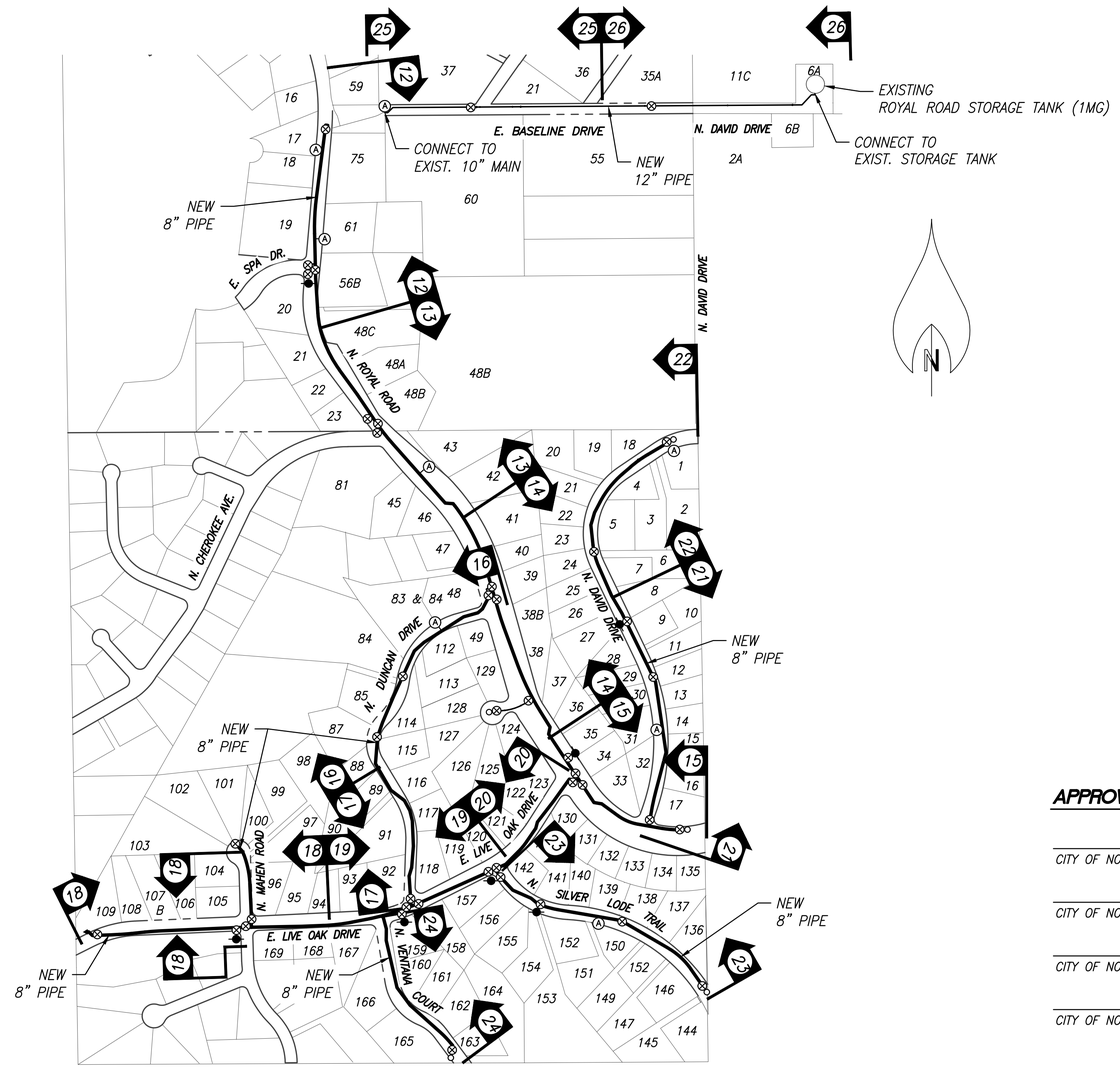

SITE PLAN
1"=300'

INSPECTOR'S RECORD DRAWING COMMENTS
INSPCT.:
CONTR.:
START: FINAL.:
PIPE: D☐ PVC☐
D☐ PVC☐
SVC LINE MAT.:
B.F.'S:
GATES:
F.H.'S BRAND: MAT.:
YES NO
MAGNETIC TAPE INST. ☐ ☐
TRACER WIRE INST. ☐ ☐
ALL VALVES WERE INSTALLED PER PLAN
Signature
Date
GPS LAT/LONG. YES ☐ NO ☐

FOR ENGINEERING AS-BUILT RECORD DRAWING STAMP

APPROVALS:

CITY OF NOGALES PUBLIC WORKS DEPT. DATE

CITY OF NOGALES ENGINEER DATE

CITY OF NOGALES UTILITIES DIRECTOR DATE

CITY OF NOGALES FIRE DEPARTMENT DATE

Contact Arizona 811 at least two full working days before you begin excavation
ARIZONA811
Call 811 or click Arizona811.com

Kimley»Horn

© 2022 KIMLEY-HORN AND ASSOCIATES, INC.
333 EAST WETMORE ROAD, SUITE 280
TUCSON, ARIZONA 85705 (520) 615-9191

NO.	BY	DATE	REVISION	APPR.	DATE

Registered Professional Engineer (Civil)
CERTIFICATE NO. 38413
RAY MONTOYA
Date Signed 08/22/22
ARIZONA, U.S.A.
Expires 12/31/23

CITY OF NOGALES
WATER MAIN REPLACEMENT
ROYAL ROAD

COVER, INDEX & LOCATION MAP

DESIGNED BY: ROM/GAG	DATE 07/22	SURVEY REQUEST NO.	1 OF 33
DRAWN BY: KMT/DIM	DATE 07/22	SCALE: VERT.: NO SCALE HORIZ.: 1"=250'	PLAN NO.
CHECKED BY: ROM/RPM	DATE 08/22		

Plotted By:Karli.Timlin Date:October 13, 2022 File Path:K:\TUC_WaterResources\098036008_City Of Nogales\CADD\Water Plans Royal Road.3.201\3.201Royal Road Wtr Plans 1.dwg

WATER SYSTEM MODIFICATION NOTES

1. **ACCEPTANCE CONDITIONS:**
   A. THIS PROJECT IS ACCEPTED BY THE CITY OF NOGALES PUBLIC WORKS DEPARTMENT FOR SUBSTANTIAL CONCURRENCE WITH STANDARD SPECIFICATIONS AND DETAILS.
   B. ACCEPTANCE OF THESE PLANS IS VALID FOR 3 YEARS AFTER THE DATE OF THE SIGNATURE.
   C. THE WARRANTY AND GUARANTEE DURATION FOR ALL WATER WORK ON THIS PROJECT SHALL BE TWO (2) YEARS COMMENCING ON THE DATE OF FINAL ACCEPTANCE OF THE WATER WORK BY THE CITY OF NOGALES PUBLIC WORKS DEPARTMENT.
2. **CURRENT STANDARDS:**
   ALL WATER SYSTEM MODIFICATION CONSTRUCTION WORK SHALL CONFORM TO THE FOLLOWING STANDARDS AND SPECIAL PROVISIONS:
   A. TUCSON WATER STANDARD SPECIFICATIONS AND DETAILS (2017 EDITION), AND PIMA ASSOCIATION OF GOVERNMENTS (PAG) SPECIFICATIONS AND DETAILS FOR PUBLIC IMPROVEMENTS (2015 EDITION).
   B. THE WATER SYSTEM MODIFICATIONS SPECIAL PROVISIONS FOR THIS PROJECT.
3. **WATER SYSTEM MODIFICATION PRE-CONSTRUCTION PROCEDURE:**
   A. THE CONTRACTOR SHALL CONTACT THE CITY OF NOGALES PUBLIC WORKS DEPARTMENT, CONSTRUCTION SECTION (XXX-XXXX), A MINIMUM OF THREE (3) CALENDAR DAYS PRIOR TO ANY WATER WORK. THE CONTRACTOR SHALL REFER TO THE CITY OF NOGALES PUBLIC WORKS DEPARTMENT PLAN NO. _____.
   B. THE CITY OF NOGALES PUBLIC WORKS DEPARTMENT CONSTRUCTION SECTION WILL SCHEDULE THE TIME AND PLACE FOR THE MEETING.
   C. NO WATER SYSTEM CONSTRUCTION SHALL BEGIN UNTIL A "NOTICE TO PROCEED" HAS BEEN ISSUED BY THE CITY OF NOGALES PUBLIC WORKS DEPARTMENT.
   D. ANY WATER WORK INSTALLED PRIOR TO THE NOTICE TO PROCEED DATE SHALL BE REMOVED BY THE CONTRACTOR AT THE CONTRACTOR'S EXPENSE.
4. **SHUT-DOWN OF TRANSMISSION MAINS:**
   A. CONSTRUCTION ON THE _____INCH (__") MAIN(S) SHALL TAKE PLACE ONLY IN THE OFF PEAK SEASON BETWEEN OCTOBER 1 AND MARCH 30.
   B. THE CONTRACTOR SHALL BE ALLOWED A MAXIMUM OF (__) CALENDAR DAYS DOWN TIME FOR ANY ONE SHUT-DOWN.
   C. MULTIPLE SHUT-DOWNS WILL BE ALLOWED WITH A MINIMUM OF ____ (__) CALENDAR DAYS BETWEEN SHUT-DOWNS.
5. **DIMENSIONS SLOPES AND GRADES:**
   ALL DIMENSIONS, SLOPES AND GRADES OF EXISTING WATER LINES ARE TAKEN FROM "AS BUILT". **DRAWINGS. IT SHALL BE THE CONTRACTOR'S RESPONSIBILITY TO DETERMINE EXACT** INFORMATION BEFORE ORDERING ANY SPECIAL FITTINGS OR EQUIPMENT.
6. **SHUT-DOWN OF DISTRIBUTION MAINS:**
   SHUT-DOWN OF THE EXISTING WATER SYSTEM REQUIRING THE OPERATION OF NOGALES PUBLIC WORKS VALVES SHALL BE COORDINATED THROUGH A CITY OF NOGALES PUBLIC WORKS DEPARTMENT CONSTRUCTION INSPECTOR.
7. **DEPTH OF NEW WATER MAINS:**
   A. NEW WATER MAINS SHALL BE INSTALLED AT A MINIMUM DEPTH OF THREE FEET (3.0') FROM THE BOTTOM OF ANY EXCAVATION OR SCARIFICATION TO THE TOP OF THE NEW PIPE. THIS DEPTH SHALL BE MAINTAINED FOR FIVE FEET (5.0') BEYOND ANY EXCAVATION, MEASURED PERPENDICULAR TO THE PROPOSED STRUCTURE OR EDGE OF THE PROPOSED ROADWAY.
   B. IN NO CASE SHALL NEW WATER MAINS BE INSTALLED LESS THAN THREE AND SIXTY SEVEN HUNDREDTHS OF A FOOT (3.67') DEEP FROM THE FINISHED GRADE TO THE TOP OF THE NEW PIPE.
   C. THESE MINIMUMS SHALL APPLY TO ALL WATER MAINS UNLESS OTHERWISE NOTED ON THE PLANS.
8. **DEPTH OF NEW SERVICE LINES:**
   A. NEW SERVICE LINES, TWO INCH (2") AND SMALLER, SHALL BE INSTALLED AT A MINIMUM DEPTH OF TWO FEET (2.0') FROM THE BOTTOM OF ANY EXCAVATION OR SCARIFICATION TO THE TOP OF THE NEW SERVICE LINE. THIS DEPTH SHALL BE MAINTAINED FOR FIVE FEET (5.0') BEYOND ANY EXCAVATION, MEASURED PERPENDICULAR TO THE PROPOSED STRUCTURE OR EDGE OF THE PROPOSED ROADWAY.
   B. IN NO CASE SHALL NEW SERVICE LINES BE INSTALLED LESS THAN THREE FEET (3.0') DEEP FROM THE FINISHED GRADE TO THE TOP OF THE NEW SERVICE LINE.
   C. THESE MINIMUMS SHALL APPLY TO ALL SERVICE LINES UNLESS OTHERWISE NOTED ON THE PLANS.
9. **WATER METERS AND METER BOXES:**
   THE CONTRACTOR SHALL BE RESPONSIBLE FOR ALL WATER METERS AND METER BOXES IN THE CONSTRUCTION AREA. THIS WILL INCLUDE BUT NOT BE LIMITED TO:
   A. PROTECTION OF METERS: AT ALL TIMES THE CONTRACTOR SHALL TAKE PRECAUTIONS TO AVOID ANY DAMAGE TO METERS. THE CONTRACTOR SHALL PROVIDE FOR THEIR SAFE STORAGE AND THE PROPER EQUIPMENT FOR THEIR HANDLING.
   B. ACCESS TO METERS: THE CONTRACTOR SHALL MAINTAIN ACCESS TO ALL IN-SERVICE METERS DURING CONSTRUCTION. AT THE CLOSE OF THE PROJECT THE CONTRACTOR SHALL ENSURE THAT ALL METERS ARE LEFT ACCESSIBLE AND THAT ALL METER BOXES ARE ADJUSTED TO FINAL GRADE.
10. **FIRE PROTECTION SHUT DOWN:**
   FORTY-EIGHT (48) HOURS PRIOR TO SHUT-DOWN OF ANY FIRE HYDRANTS OR FIRE PROTECTION SERVICE LINES THE CONTRACTOR SHALL PROVIDE THE CITY OF NOGALES PUBLIC WORKS DEPARTMENT CONSTRUCTION INSPECTOR WITH A WRITTEN REPORT INDICATING THE LOCATION AND DURATION OF ANY FIRE HYDRANT OR FIRE PROTECTION SHUT-DOWNS.
   THE CONTRACTOR SHALL NOTIFY THE CITY OF NOGALES PUBLIC WORKS DEPARTMENT CONSTRUCTION INSPECTOR WHEN FIRE HYDRANTS OR FIRE PROTECTION SERVICES ARE BACK IN SERVICE.
11. **MAINTAIN SERVICE TO CUSTOMERS:**
   THE CONTRACTOR SHALL BE RESPONSIBLE FOR MAINTAINING SERVICE TO ALL WATER CUSTOMERS DURING CONSTRUCTION.
   IT SHALL BE THE CONTRACTOR'S RESPONSIBILITY TO DETERMINE WHICH SERVICES WILL BE EFFECTED BY THIS PROJECT.
   IT MAY BE NECESSARY TO ACCOMPLISH TIE-OVERS, RE-CONNECTIONS, ETC. WHILE BUSINESS CUSTOMERS ARE CLOSED.
   IF INTERRUPTION OF SERVICE IS UNAVOIDABLE THE CONTRACTOR SHALL NOTIFY THE WATER INSPECTOR A MINIMUM OF FORTY-EIGHT (48) HOURS IN ADVANCE TO COORDINATE SHUT-DOWNS. EVERY EFFORT SHALL BE MADE TO MINIMIZE DISRUPTION TO THE CUSTOMER.
   IF THE CONTRACTOR CHOOSES TO ABANDON ANY PORTION OF THE EXISTING WATER SUPPLY SYSTEM WITHOUT CONCURRENT NEW CONSTRUCTION AS CALLED FOR ON THE PLANS, THE CONTRACTOR SHALL PROVIDE ANY AND ALL MATERIALS AND CONSTRUCTION OF A TEMPORARY OR PERMANENT WATER SYSTEM TO MAINTAIN CONTINUED WATER SERVICE TO CUSTOMERS AT NO ADDITIONAL COST.
12. **SPECIAL USE WATER PERMITS:**
   PRIOR TO COMMENCING WORK, THE CONTRACTOR SHALL APPLY FOR TWO (2)SPECIAL WATER USE PERMITS FROM THE CITY OF NOGALES PUBLIC WORKS DEPARTMENT.
   A. CONSTRUCTION WATER SPECIAL PERMIT:
   THERE WILL BE NO CHARGE FOR THIS PERMIT, BUT THE CONTRACTOR MUST PAY THE SUM OF $_____ PLUS TAX AS THE ESTIMATED COST OF THE WATER TO BE USED. THIS WATER MAY ONLY BE USED FOR TRENCH SETTLING, DISINFECTION AND TESTING.
   B. METERED FIRE HYDRANT ONLY PERMIT:
   THIS NON-TRANSFERABLE PERMIT WILL ENTITLE THE CONTRACTOR TO USE WATER THROUGH A METER FROM EXISTING FIRE HYDRANTS AT APPROVED LOCATIONS. WATER USED UNDER THIS PERMIT IS FOR GENERAL CONSTRUCTION PURPOSES SUCH AS DUST CONTROL, SITE PREPARATION, ETC.
13. **NEW MATERIAL:**
   ALL MATERIALS, FITTINGS, AND APPURTENANCES CALLED FOR ON THE PLANS, OR REQUIRED FOR A COMPLETE INSTALLATION, SHALL BE NEW. NO REFURBISHED ITEMS OR MATERIALS WILL BE ALLOWED.
14. **VALVE BOXES:**
   THE CONTRACTOR SHALL BE RESPONSIBLE FOR ADJUSTING ALL NEW AND EXISTING WATER VALVE BOXES TO THE FINISHED GRADE PER SD-300.
15. **JOINT RESTRAINT:**
   THE CONTRACTOR SHALL USE MECHANICALLY RESTRAINED JOINTS AT ALL CHANGES OF DIRECTION IN THE WATER MAINS. THE LENGTHS OF RESTRAINED PIPE ON BOTH SIDES OF THE RESTRAINED JOINT SHALL BE AS CALLED FOR ON THE PLANS OR AS PER STANDARD DETAIL SD-600. WITH THE APPROVAL OF THE ENGINEER AND THE CITY OF NOGALES PUBLIC WORKS DEPARTMENT, THE CONTRACTOR MAY USE CONCRETE THRUST BLOCKING IN LIEU OF MECHANICALLY RESTRAINED JOINTS. CONCRETE THRUST BLOCKING SHALL COMPLY WITH STANDARD DETAIL SD-610.
16. **MARKING TAPE:**
   IF ANY EXISTING DETECTABLE MARKING TAPE IS DISTURBED OR DESTROYED DURING CONSTRUCTION, THE CONTRACTOR SHALL FURNISH AND INSTALL APPROPRIATE NEW TAPE. THERE SHALL BE NO ADDITIONAL CHARGE FOR THIS REINSTALLATION.
17. **TRACER WIRE:**
   THIS PROJECT WILL HAVE TRACER WIRE INSTALLED. IF ANY EXISTING TRACER WIRE IS DISTURBED OR DESTROYED DURING CONSTRUCTION, THE CONTRACTOR SHALL FURNISH AND INSTALL NEW TRACER WIRE TO REPLACE THE EXISTING. THERE SHALL BE NO ADDITIONAL CHARGE FOR THIS REINSTALLATION. THE TRACER WIRE SHALL BE CERTIFIED BY A LICENSED ELECTRICAL CONTRACTOR FOR CONTINUITY PRIOR TO FINAL ROADWAY PAVEMENT. FINAL ACCEPTANCE WILL NOT BE GRANTED UNTIL CERTIFICATION IS RECEIVED BY NOGALES PUBLIC WORKS.
18. **PVC PIPE DEFLECTION**
   THE CONTRACTOR MAY NOT DEFLECT PVC PIPE AT GASKETED BELL AND SPIGOT JOINTS. THE CONTRACTOR MAY USE THE FOLLOWING METHODS TO DEFLECT PVC PIPE:
   A. STANDARD DUCTILE IRON BENDS OR FITTINGS. PVC PIPE MAY BE DEFLECTED AT BENDS OR FITTINGS PROVIDED THE DEFLECTION IS WITHIN THE MANUFACTURERS'S ALLOWABLE DEFLECTION FOR THAT BEND OR FITTING.
   B. LONGITUDINAL BENDING. PVC PIPE MAY BE BENT WITHIN THE BENDING LIMITS DESCRIBED IN AWWA PUBLICATION, M23 PVC PIPE – DESIGN AND INSTALLATION MANUAL.
   C. SPECIFICALLY DESIGNED PVC PIPE INTENDED FOR JOINT DEFLECTION AT GASKET JOINTS. THE USE OF THIS PIPE FOR JOINT DEFLECTION SHALL REQUIRE APPROVAL BY THE CITY OF NOGALES PUBLIC WORKS DEPARTMENT AND THE PROJECT ENGINEER.

WATER GENERAL NOTES

1. WATER MAINS SHALL BE SUBJECT TO A PRESSURE & LEAKAGE TEST IN ACCORDANCE WITH AWWA C-600 STANDARD.
2. WATER MAINS SHALL BE DISINFECTED IN ACCORDANCE WITH ADEQ ENGINEERING BULLETIN NO. 8 'DISINFECTION OF WATER SYSTEMS'.
3. ALL MATERIALS & PRODUCTS THAT COME INTO CONTACT WITH DRINKING WATER OR DRINKING WATER TREATMENT CHEMICALS MUST COMPLY WITH NSF STANDARD 61. ANY 'OR EQUAL' SUBSTITUTION SHALL ALSO MEET NSF STANDARD 61.
4. ALL MATERIALS USED IN THE INSTALLATION OF WATER MAINS SHALL BE PURSUANT TO AAC R18-4-213 & SHALL BE NSF APPROVED FOR POTABLE WATER.

SEWER CONSTRUCTION NOTES

1. ALL DESIGN STANDARDS, MATERIALS AND WORKMANSHIP FOR PUBLIC SANITARY SEWERS SHALL BE IN ACCORDANCE WITH THE PIMA COUNTY REGIONAL WASTEWATER RECLAMATION DEPARTMENT (PCRWRD) ENGINEERING DESIGN STANDARDS 2022 (EDS 2022) AND THE STANDARD SPECIFICATIONS AND DETAILS FOR CONSTRUCTION 2022 (SSDC 2022). SAID DOCUMENTS ARE AVAILABLE THROUGH THE PCRWRD WEBSITE (www.pima.gov/wastewaterreclamation).
2. CONTRACTOR SHALL MAINTAIN ACCESS TO ALL SANITARY SEWER MANHOLES AT ALL TIMES.
3. THE CONTRACTOR SHALL FIELD-VERIFY EXISTING SEWER LINE ELEVATIONS AND ALIGNMENTS PRIOR TO CONSTRUCTION. VERIFICATION MAY REQUIRE POT-HOLING.
4. ANY HOUSE CONNECTION SEWER (HCS) OR BUSINESS CONNECTION SEWER (BCS) LINES ENCOUNTERED DURING CONSTRUCTION SHALL BE PROTECTED, REPAIRED, OR REROUTED, AS THE SITUATION DICTATES, PER PCRWRD SSDC 2022 DETAIL NO. RWRD 400 AND AT NO EXPENSE TO THE PROPERTY OWNER OR CITY OF NOGALES. HCS AND BCS LINES ARE NOT OWNED OR MAINTAINED BY CITY OF NOGALES. THE COST SHALL BE INCIDENTAL TO THE WATER MAIN INSTALLATION.
5. IMMEDIATELY REPORT ANY OF THE FOLLOWING TO THE CITY OF NOGALES OPERATIONS: ANY RELEASE OF SEWAGE, ANY DAMAGE TO THE PUBLIC SANITARY SEWER SYSTEM, OR THE DROPPING OF DEBRIS INTO A PUBLIC SANITARY SEWER MANHOLE. A CITY OF NOGALES REPRESENTATIVE WILL BE DISPATCHED TO THE SITE. THE CONTRACTOR SHALL TAKE IMMEDIATE ACTION TO CONTAIN A SANITARY SEWAGE OVERFLOW (SSO). THE CONTRACTOR SHALL BE RESPONSIBLE FOR ALL COSTS TO REPAIR THE SYSTEM, MITIGATE THE RELEASE OF SEWAGE, DISINFECT THE RELEASE AREAS, AND ANY REGULATORY PENALTIES LEVIED ON CITY OF NOGALES FOR SEWAGE ENTERING A NATURAL DRAINAGE WAY OR STORM WATER DRAINAGE SYSTEM. THE CONTRACTOR SHALL REPAIR ALL DAMAGE AS DIRECTED AND APPROVED BY THE CITY OF NOGALES FIELD REPRESENTATIVE.

WATER SYSTEM MODIFICATION LEGEND & ABBREVIATIONS

EXISTING PLAN SYMBOLS	DESCRIPTION	NEW PLAN SYMBOLS
6" W	POTABLE WATER MAIN	
6" W	POTABLE GATE VALVE	
6" W	POTABLE BUTTERFLY VALVE	
6" W	PIPE MATERIAL CHANGE	
	FIRE HYDRANT	
	DRAIN VALVE ASSEMBLY	
6" 8"	REDUCER	
	END CAP	
	BENDS, HORIZ. & VERT.	
6" W	MATERIAL CHANGE	
3/4"	AIR RELEASE VALVE W/ SIZE	1"
FPS (ADDRESS) W	FIRE PROTECTION SERVICE (FPS)	
	CORROSION TEST STATION (CTS)	
	ABANDONMENT	6" W
1 1/2" W	SERVICE LINE & METER BOX	
	SERVICE LINE TIE-OVER	T
	METER RELOCATION, SERVICE LINE RENEWAL	M R
	METER RELOCATION, SERVICE LINE ADJUSTMENT	M A
	SERVICE LINE RENEWAL	R
	SERVICE LINE ADJUSTMENT	S A
	SERVICE STUB	S
	SERVICE LINE ABANDONMENT	A
	METER BOX ADJUSTMENT	M B
	LIGHT OR JOINT USE POLE	
	POTABLE WATER MAIN	
	POTABLE GATE VALVE	
	POTABLE BUTTERFLY VALVE	

ABBREVIATIONS

ARV	AIR RELEASE VALVE
AVE	AVENUE
BOT	BOTTOM
B&C	BOX AND COVER
BC	BEGIN CURVE
CA	CEMENT ASBESTOS
"CA"	COMMON AREA
CATV	UNDERGROUND CABLE
C.I.	CONTOUR INTERVAL
CIR	CIRCLE
℄	CENTERLINE
CL	CLASS
CU	COPPER
DR	DIMENSION RATIO, DRIVE
DI	DUCTILE IRON
DVA	DRAIN VALVE ASSEMBLY
EA	EACH
EC	END CURVE
EXIST.	EXISTING
FL	FLANGE
G	GAS
HWY	HIGHWAY
HZ/HORIZ.	HORIZONTAL
INV.	INVERT
LT	LEFT
LF	LINEAR FOOT
MJ	MECHANICAL JOINT
MIN	MINIMUM
N/A	NOT APPLICABLE
NPI	NON PAY ITEM
NSF	NATIONAL SANITATION FOUNDATION
N/N.	NORTH
OHE	OVERHEAD ELECTRIC
OHU	OVERHEAD UNKNOWN UTILITY
PCC	POINT OF COMPOUND CURVE
PVC	POLYVINYL CHLORIDE
⅊	PROPERTY LINE
PL	PLACE
PT	POINT
RD	ROAD
R/W, ROW	RIGHT-OF-WAY
RT	RIGHT
ST	STREET
STA	STATION
SD	STORM DRAIN
T.S.&V.	TAPPING SLEEVE & VALVE
TW	TUCSON WATER
VT/VERT.	VERTICAL

CITY OF NOGALES STREET DEPARTMENT AND STREET SUPERINTENDENT NOTES

1. THE CONTRACTOR SHALL OBTAIN AN EXCAVATION PERMIT FROM THE CITY OF NOGALES TRANSPORTATION DEPARTMENT PRIOR TO ANY WORK WITHIN THE PUBLIC RIGHT-OF-WAY.
2. A PRE-CONSTRUCTION FIELD MEETING SHALL BE CONDUCTED WITH THE CITY OF NOGALES TRANSPORTATION INSPECTOR PRIOR TO ANY WORK WITHIN THE PUBLIC RIGHT-OF-WAY.
3. THE EXTENT AND TYPE OF SURFACE TREATMENTS/REPAIRS INDICATED ON THE PLANS MAY NOT BE ALL INCLUSIVE OF THE WORK THAT IS NEEDED. DEPENDING ON FIELD CONDITIONS, ADDITIONAL WORK MAY BE REQUIRED.
4. PAVING PATCH NEEDS TO BE 12' OR ONE TRAVEL LANE OF THE ROAD, IF FEASIBLE.

ENGINEER'S STATEMENT

EXISTING ABOVE AND BELOW GROUND UTILITIES HAVE BEEN DELINEATED ON THESE PLANS BASED UPON FIELD SURVEY INFORMATION AS WELL AS FROM BLUE STAKE MARKINGS AND UTILITY BASE MAPS (AS MADE AVAILABLE) AND THEREFORE THE ENGINEER MAKES NO GUARANTEE OF THE ACCURACY OR COMPLETENESS OF THE UTILITY LOCATIONS OR OF THE EXISTENCE OR NONEXISTENCE OF ANY UTILITY OR UNDERGROUND STRUCTURES SHOWN. THE CONTRACTOR IS REQUIRED TO TAKE ALL PRECAUTIONARY MEANS NECESSARY TO PROTECT ANY UTILITY. THE CONTRACTOR SHALL VERIFY LOCATIONS AND ELEVATIONS OF ALL UTILITIES PRIOR TO ANY CONSTRUCTION. CONTRACTOR SHALL ALSO BE RESPONSIBLE FOR DAMAGE TO EXISTING ABOVE OR UNDERGROUND UTILITIES, INCLUDING THOSE NOT SHOWN ON THESE PLANS.

Registered Professional Engineer (Civil) CERTIFICATE NO. 38413 RAY MONTOYA Date Signed 08/22/22 ARIZONA, U.S.A.
Expires 12/31/23

NO.	BY	DATE	REVISION	APPR.	DATE

Kimley»Horn
© 2022 KIMLEY-HORN AND ASSOCIATES, INC.
333 EAST WETMORE ROAD, SUITE 280
TUCSON, ARIZONA 85705 (520) 615-9191

CITY OF NOGALES
WATER MAIN REPLACEMENT
ROYAL ROAD

NOTES, LEGEND & ABBREVIATIONS

DESIGNED BY: ROM/GAG	DATE 07/22	SURVEY REQUEST NO.	2 OF 33
DRAWN BY: KMT/DIM	DATE 07/22	SCALE: VERT.: NO SCALE HORIZ.: NO SCALE	PLAN NO.
CHECKED BY: ROM/RPM	DATE 08/22		

Contact Arizona 811 at least two full working days before you begin excavation
ARIZONA811
Call 811 or click Arizona811.com

Plotted By:Kari.Timlin Date:October 13, 2022 File Path:K:\TUC_WaterResources\098036008_City Of Nogales\CADD\Water Plans Royal Road.3.201\3.201Royal Road Wtr Plans 2-3.dwg

MATERIAL QUANTITY SUMMARY

ITEM NO	ITEM DESCRIPTION	UNIT	SHEET 12		SHEET 13		SHEET 14		SHEET 15		SHEET 16		SHEET 17		SHEET 18		SHEET 19		SHEET 20	
			ESTIMATE	AS-BUILT	ESTIMATE	AS-BUILT	ESTIMATE	AS-BUILT	ESTIMATE	AS-BUILT	ESTIMATE	AS-BUILT	ESTIMATE	AS-BUILT	ESTIMATE	AS-BUILT	ESTIMATE	AS-BUILT	ESTIMATE	AS-BUILT
6	PAVEMENT REPLACEMENT FOR NEW WATER MAINS																			
7	PIPE, DUCTILE IRON, (DI), 6" (CL 350) – RESTRAINED	LF	16		25		31		35		11				10		23			
8	PIPE, DUCTILE IRON, (DI), 8" (CL 350) – RESTRAINED	LF					13										15			
9	PIPE, DUCTILE IRON, (DI), 12" (CL 350) – RESTRAINED	LF																		
10	PIPE, POLYVINYL CHLORIDE (PVC), 6" DR 14 (CL 305)	LF			31		181													
11	PIPE, POLYVINYL CHLORIDE (PVC), 8" DR 14 (CL 305)	LF	863		987		987		769		945		613		1362		785		440	
12	PIPE, POLYVINYL CHLORIDE (PVC), 12" DR	LF																		
13	SERVICE RENEWAL (METER NOT RELOCATED), 1"	LF	291		311		510		595		171		76		540		252		40	
14	GATE VALVE, 6", BOX & COVER	EA	2		2		3		1		1				1		2			
15	GATE VALVE, 8", BOX & COVER	EA	2		1				5		1		1		2		5		1	
16	GATE VALVE, 12", BOX & COVER	EA																		
17	FLANGED GATE VALVE W/ WHEEL, 6"	EA																		
18	FLANGED GATE VALVE W/ WHEEL, 10"	EA																		
19	ECCENTRIC REDUCER 8"X4"	EA													1					
20	ECCENTRIC REDUCER 8"X6"	EA	1																	
21	ECCENTRIC REDUCER 12"X10"	EA																		
22	COMBINATION AIR/VACUUM RELEASE VALVE (ARV), 1"	EA	2		1												1			
23	DRAIN VALVE ASSEMBLY (DVA)	EA	1				1		1						1					
24	FIRE HYDRANT	EA	1		1		1		1		1				1		2			
25	REMOVE AND SALVAGE EXISTING FIRE HYDRANT	EA	1		1		1		1		1				1		2			
26	CONNECTIONS, 4"	EA													1					
27	CONNECTIONS, 6"	EA	1		1															
28	CONNECTIONS, 10"	EA	1																	
29	REMOVE AND DISPOSE OF EXISTING WATER MAINS	LS																		
30	WATER PIPE, ABANDON IN PLACE	LF	853		1000		1000		558		941		598		1330		800		453	

ITEM NO	ITEM DESCRIPTION	UNIT	SHEET 21		SHEET 22		SHEET 23		SHEET 24		SHEET 25		SHEET 26		SHEET 30		TOTALS	
			ESTIMATE	AS-BUILT	ESTIMATE	AS-BUILT	ESTIMATE	AS-BUILT	ESTIMATE	AS-BUILT	ESTIMATE	AS-BUILT	ESTIMATE	AS-BUILT	ESTIMATE	AS-BUILT	ESTIMATE	AS-BUILT
6	PAVEMENT REPLACEMENT FOR NEW WATER MAINS	SY													13790		13790	
7	PIPE, DUCTILE IRON, (DI), 6" (CL 350) – RESTRAINED	LF	20				10										181	
8	PIPE, DUCTILE IRON, (DI), 8" (CL 350) – RESTRAINED	LF							15								43	
9	PIPE, DUCTILE IRON, (DI), 12" (CL 350) – RESTRAINED	LF									190		120				310	
10	PIPE, POLYVINYL CHLORIDE (PVC), 6" DR 14 (CL 305)	LF															212	
11	PIPE, POLYVINYL CHLORIDE (PVC), 8" DR 14 (CL 305)	LF	1001		816		1039		666								10833	
12	PIPE, POLYVINYL CHLORIDE (PVC), 12" DR	LF									682		850				1532	
13	SERVICE RENEWAL (METER NOT RELOCATED), 1"	LF	346		244		313		250		5						3944	
14	GATE VALVE, 6", BOX & COVER	EA	1				1										14	
15	GATE VALVE, 8", BOX & COVER	EA	2		1		3		2								26	
16	GATE VALVE, 12", BOX & COVER	EA									1		1				2	
17	FLANGED GATE VALVE W/ WHEEL, 6"	EA											1				1	
18	FLANGED GATE VALVE W/ WHEEL, 10"	EA											1				1	
19	ECCENTRIC REDUCER 8"X4"	EA															1	
20	ECCENTRIC REDUCER 8" X 6"	EA															1	
21	ECCENTRIC REDUCER 12"X10"	EA											1				1	
22	COMBINATION AIR/VACUUM RELEASE VALVE (ARV), 1"	EA									1						5	
23	DRAIN VALVE ASSEMBLY (DVA)	EA			1		1		1								7	
24	FIRE HYDRANT	EA	1				1										10	
25	REMOVE AND SALVAGE EXISTING FIRE HYDRANT	EA	1				1										10	
26	CONNECTIONS, 4"	EA															1	
27	CONNECTIONS, 6"	EA															2	
28	CONNECTIONS, 10"	EA									1		1				3	
29	REMOVE AND DISPOSE OF EXISTING WATER MAINS	LS															1	
30	WATER PIPE, ABANDON IN PLACE	LF	1019		932		1069		690		759		970				12972	

Contact Arizona 811 at least two full working days before you begin excavation
ARIZONA811
Call 811 or click Arizona811.com

Kimley»Horn
© 2022 KIMLEY-HORN AND ASSOCIATES, INC.
333 EAST WETMORE ROAD, SUITE 280
TUCSON, ARIZONA 85705 (520) 615-9191

NO.	BY	DATE	REVISION	APPR.	DATE

Registered Professional Engineer (Civil)
CERTIFICATE NO.
38413
RAY
MONTOYA
Date Signed 08/30/22
ARIZONA, U.S.A.
Expires 12/31/23

CITY OF NOGALES
WATER MAIN REPLACEMENT
ROYAL ROAD

MATERIAL QUANTITIES SUMMARY

DESIGNED BY: ROM/GAG	DATE 07/22	SURVEY REQUEST NO.	3 OF 33
DRAWN BY: KMT/DIM	DATE 07/22	SCALE: VERT.: NO SCALE HORIZ.: NO SCALE	PLAN NO.
CHECKED BY: ROM/RPM	DATE 08/22		

Plotted By:Karli.Timlin Date:October 13, 2022 File Path:K:\TUC_WaterResources\098036008_City Of Nogales\CADD\Water Plans Royal Road.3.201\3.201Royal Road Wtr Plans 2-3.dwg

POINT TABLE			
CP #	NORTHING	EASTING	DESCRIPTION
1	132743.40	1015423.21	ALIGN CL ROYAL RD
2	132663.54	1015483.40	ALIGN CL ROYAL RD
3	132477.89	1015578.02	ALIGN CL ROYAL RD
4	132060.41	1015621.95	ALIGN CL ROYAL RD
5	131492.57	1015572.33	ALIGN CL ROYAL RD
6	131397.93	1015564.07	ALIGN CL ROYAL RD
7	131110.76	1015646.43	ALIGN CL ROYAL RD
8	130813.71	1015870.27	ALIGN CL ROYAL RD
9	130783.85	1015893.14	ALIGN CL ROYAL RD

LINE TABLE		
LINE #	BEARING	LENGTH
L1	S37°00'23"E	100.00
L2	S04°59'37"W	570.00
L3	S04°59'37"W	95.00
L4	S36°59'59"E	371.95

CURVE TABLE				
CURVE #	RADIUS	LENGTH	DELTA	TANGENT
C1	600.00	209.44	20°00'00"	105.80
C2	1100.00	422.37	22°00'00"	213.82
C3	416.88	305.54	41°59'36"	160.00
C4	2432.76	37.61	0°53'09"	18.81
C5	2432.76	276.27	6°30'24"	138.28

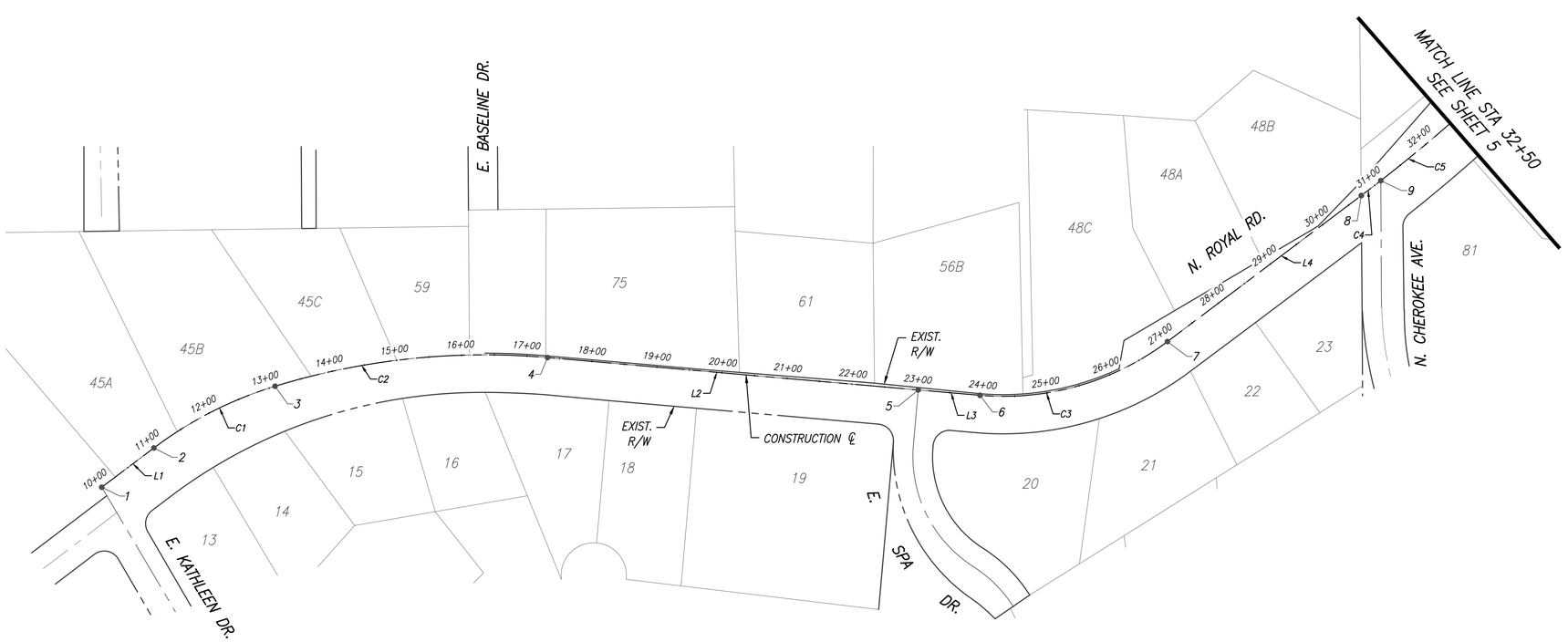

PROJECT SITE
1"=100'

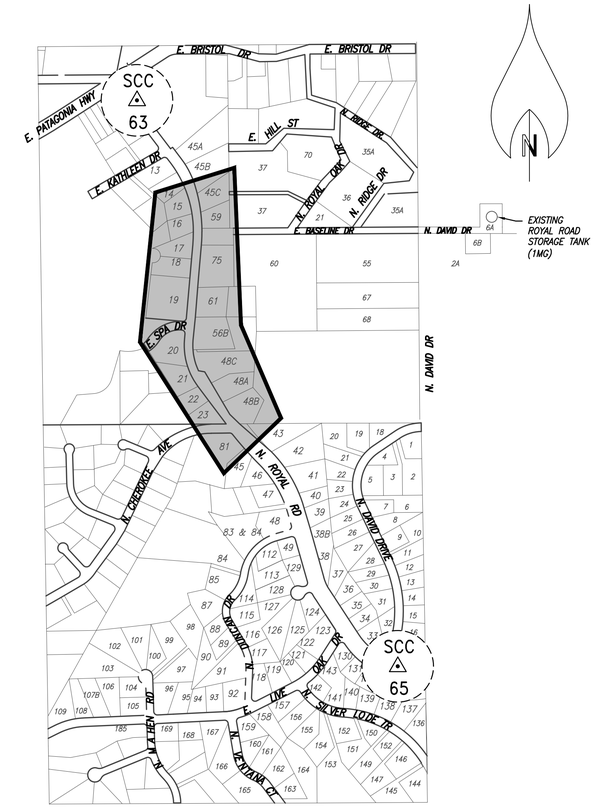

INSET KEYMAP
1"=500'

SANTA CRUZ COUNTY GIS CONTROL POINT DATA				
PT ID	NORTHING	EASTING	ELEVATION	DESCRIPTION
SCC 63	133075.1678	1015174.4187	3965.8206	3" ACP STAMPED SANTA CRUZ COUNTY GIS CONTROL POINT
SCC 65	129119.5940	1016996.6755	4007.2500	3" ACP STAMPED SANTA CRUZ COUNTY GIS CONTROL POINT

DATUM: ARIZONA STATE PLANE INT'L FT – CENTRAL ZONE

HORIZONTAL: NAD 83 VERTICAL: NAVD 88

NOTES:

1. SURVEY CONTROL POINTS LOCATED ALONG RIGHT–OF–WAY CENTERLINE, UNLESS OTHERWISE NOTED.
2. ALL STATIONING ALONG RIGHT–OF–WAY CENTERLINE. UNLESS OTHERWISE SPECIFIED ON THE PLANS.

BASIS OF BEARINGS:
THE BASIS OF BEARINGS FOR THIS PROJECT IS GRID BEARING OF SOUTH 24°44'05" EAST BETWEEN SANTA CRUZ COUNTY GIS CONTROL POINT SCC–63, AND SANTA CRUZ COUNTY GIS CONTROL POINT SCC–65, AS ESTABLISHED FROM THE ARIZONA STATE PLANE COORDINATE SYSTEM OF 1983, CENTRAL ZONE.

BASIS OF ELEVATIONS:
THE BASIS OF ELEVATIONS FOR THIS PROJECT IS THE SANTA CRUZ COUNTY GIS CONTROL POINT SCC–63, BEING A 3–INCH ALUMINUM CAP SURVEY MONUMENT, STAMPED SANTA CRUZ COUNTY GIS CONTROL POINT SCC–63, AT THE SOUTHEAST CORNER OF PATAGONIA HIGHWAY AND ROYAL ROAD., THE ELEVATION IS 3,965.82 FEET (NADV88).

BASIS OF COORDINATES:
THE BASIS OF COORDINATES ARE BASED ON THE ARIZONA STATE PLANE COORDINATE SYSTEM OF 1983, CENTRAL ZONE, INTERNATIONAL FEET. STATE PLANE COORDINATE WERE SCALED TO CREATE A "MODIFIED" COORDINATE SYSTEM AT SURFACE VALUES A SCALE FACTOR OF 1.000003179 WAS APPLIED AT SANTA CRUZ COUNTY GIS CONTROL POINT SCC–63 TO PRODUCE THE FINAL SURFACE COORDINATES.

Contact Arizona 811 at least two full working days before you begin excavation
ARIZONA811
Call 811 or click Arizona811.com

Kimley»Horn
© 2022 KIMLEY–HORN AND ASSOCIATES, INC.
333 EAST WETMORE ROAD, SUITE 280
TUCSON, ARIZONA 85705 (520) 615–9191

NO.	BY	DATE	REVISION	APPR.	DATE

Registered Professional Engineer (Civil)
CERTIFICATE NO. 38413
RAY MONTOYA
Date Signed 9/8/2022
ARIZONA, U.S.A.
Expires 12/31/23

CITY OF NOGALES
WATER MAIN REPLACEMENT
ROYAL ROAD

HORIZONTAL CONTROL
ROYAL ROAD

DESIGNED BY: ROM/GAG	DATE 07/22	SURVEY REQUEST NO.	4 OF 33
DRAWN BY: KMT/DIM	DATE 07/22	SCALE: VERT.: NO SCALE HORIZ.: 1"=150'	PLAN NO.
CHECKED BY: ROM/RPM	DATE 08/22		

Plotted By:Gerardo.Gonzalez Date:October 13, 2022 File Path:K:\TUC_WaterResources\098036008_City Of Nogales\CADD\Water Plans Royal Road.3.201\3.201Royal Road Wtr Plans 4–11.dwg

POINT TABLE			
CP #	NORTHING	EASTING	DESCRIPTION
10	130575.90	1016074.80	ALIGN CL ROYAL RD
11	130208.24	1016287.08	ALIGN CL ROYAL RD
12	129912.56	1016369.68	ALIGN CL ROYAL RD
13	129725.60	1016421.91	ALIGN CL ROYAL RD
14	129618.26	1016470.67	ALIGN CL ROYAL RD
15	129389.84	1016620.45	ALIGN CL ROYAL RD
16	129306.22	1016675.29	ALIGN CL ROYAL RD
17	129106.04	1017188.51	ALIGN CL ROYAL RD
18	129697.86	1016462.90	ALIGN CL ROYAL RD CIR
19	129626.13	1016282.88	ALIGN CL ROYAL RD CIR

LINE TABLE		
LINE #	BEARING	LENGTH
L5	S15°36'30"E	307.00
L6	S15°36'30"E	194.12
L7	S33°15'17"E	273.15
L8	S33°15'17"E	100.00
L9	S68°16'33"W	260.00

CURVE TABLE				
CURVE #	RADIUS	LENGTH	DELTA	TANGENT
C5	2432.76	276.27	6°30'24"	138.28
C6	854.00	429.04	28°47'05"	219.15
C7	384.31	118.36	17°38'46"	59.65
C8	475.02	587.64	70°52'46"	338.08

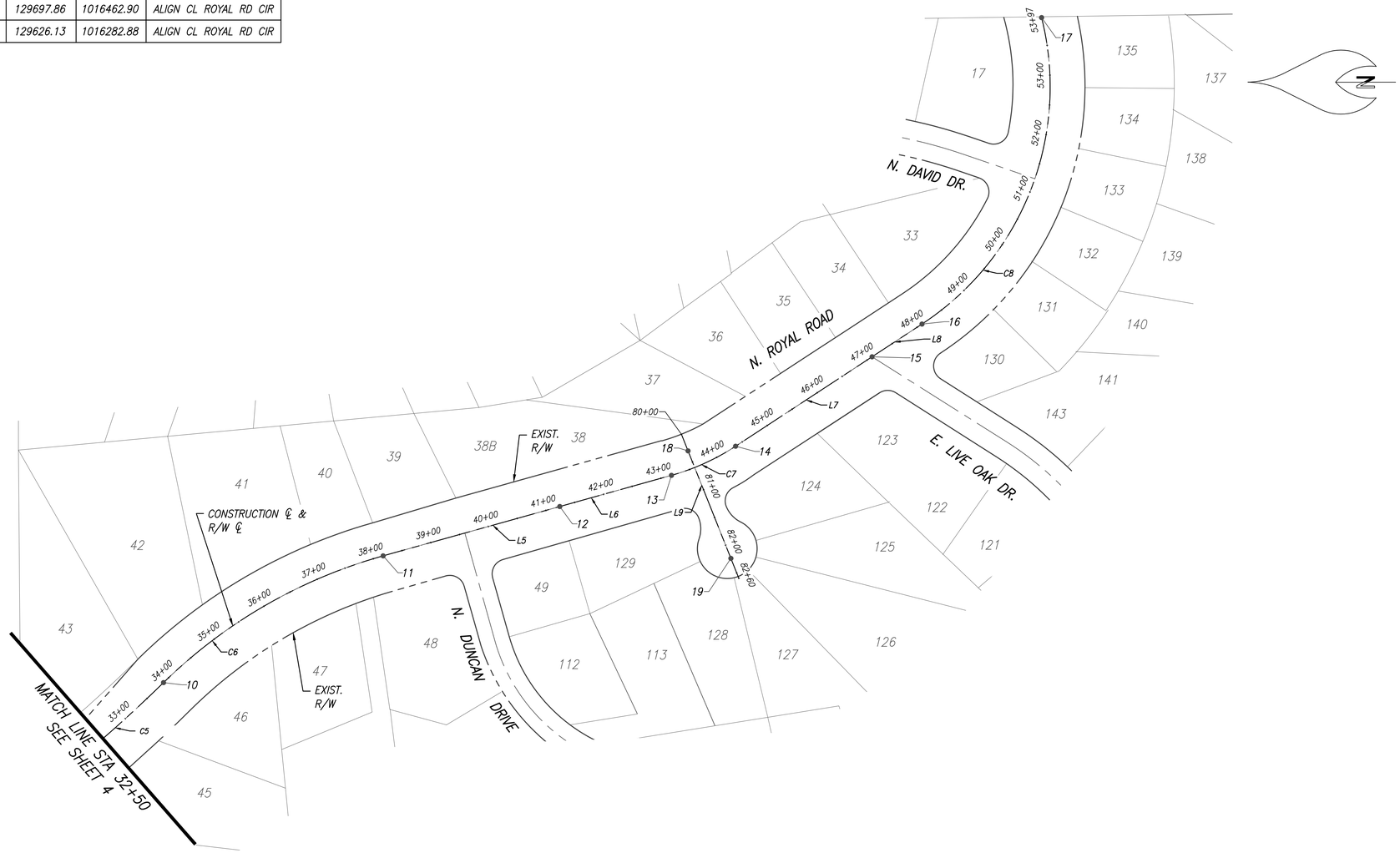

PROJECT SITE
1"=100'

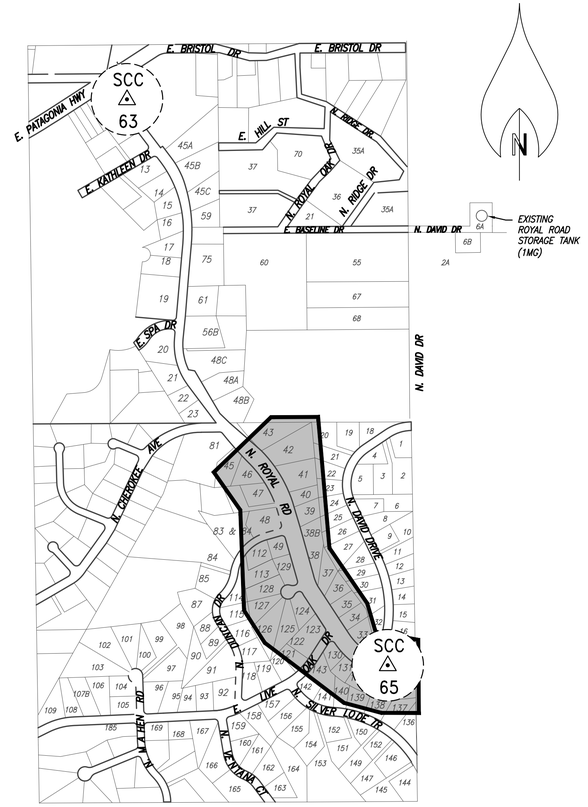

INSET KEYMAP
1"=500'

SANTA CRUZ COUNTY GIS CONTROL POINT DATA				
PT ID	NORTHING	EASTING	ELEVATION	DESCRIPTION
SCC 63	133075.1678	1015174.4187	3965.8206	3" ACP STAMPED SANTA CRUZ COUNTY GIS CONTROL POINT
SCC 65	129119.5940	1016996.6755	4007.2500	3" ACP STAMPED SANTA CRUZ COUNTY GIS CONTROL POINT

DATUM: ARIZONA STATE PLANE INT'L FT – CENTRAL ZONE

HORIZONTAL: NAD 83 VERTICAL: NAVD 88

NOTES:

1. SURVEY CONTROL POINTS LOCATED ALONG RIGHT-OF-WAY CENTERLINE, UNLESS OTHERWISE NOTED.
2. ALL STATIONING ALONG RIGHT-OF-WAY CENTERLINE. UNLESS OTHERWISE SPECIFIED ON THE PLANS.
3. FOR BASIS OF BEARINGS, BASIS OF ELEVATIONS & BASIS OF COORDINATES, SEE SHEET 4.

Contact Arizona 811 at least two full working days before you begin excavation
ARIZONA811
Call 811 or click Arizona811.com

Kimley»Horn

© 2022 KIMLEY-HORN AND ASSOCIATES, INC.
333 EAST WETMORE ROAD, SUITE 280
TUCSON, ARIZONA 85705 (520) 615-9191

NO.	BY	DATE	REVISION	APPR.	DATE

Registered Professional Engineer (Civil) CERTIFICATE NO. 38413 RAY MONTOYA Date Signed 08/22/22 ARIZONA, U.S.A.
Expires 12/31/23

CITY OF NOGALES
WATER MAIN REPLACEMENT
ROYAL ROAD

HORIZONTAL CONTROL
ROYAL ROAD (CONT'D)

DESIGNED BY: ROM/GAG	DATE 07/22	SURVEY REQUEST NO.	5 OF 33
DRAWN BY: KMT/DIM	DATE 07/22	SCALE: VERT.: NO SCALE HORIZ.: 1"=150'	PLAN NO.
CHECKED BY: ROM/RPM	DATE 08/22		

Plotted By:Gerardo.Gonzalez Date:October 13, 2022 File Path:K:\TUC_WaterResources\098036008_City Of Nogales\CADD\Water Plans Royal Road.3.201\3.201Royal Road Wtr Plans 4-11.dwg

POINT TABLE			
CP #	NORTHING	EASTING	DESCRIPTION
20	130071.47	1016325.28	ALIGN CL DUNCAN DR
21	130021.28	1016145.20	ALIGN CL DUNCAN DR
22	129770.24	1015925.85	ALIGN CL DUNCAN DR
23	129600.72	1015838.00	ALIGN CL DUNCAN DR
24	129429.91	1015814.33	ALIGN CL DUNCAN DR
25	129275.80	1015907.32	ALIGN CL DUNCAN DR
26	129090.28	1015954.39	ALIGN CL DUNCAN DR
27	128812.88	1015941.62	ALIGN CL DUNCAN DR

LINE TABLE		
LINE #	BEARING	LENGTH
L10	S74°25'32"W	186.95
L11	S31°06'30"E	180.00
L12	S02°38'13"W	277.69

CURVE TABLE				
CURVE #	RADIUS	LENGTH	DELTA	TANGENT
C9	304.00	352.84	66°30'03"	199.31
C10	286.00	194.67	38°59'57"	101.28
C11	137.00	186.51	78°00'06"	110.94
C12	329.71	194.19	33°44'44"	100.00

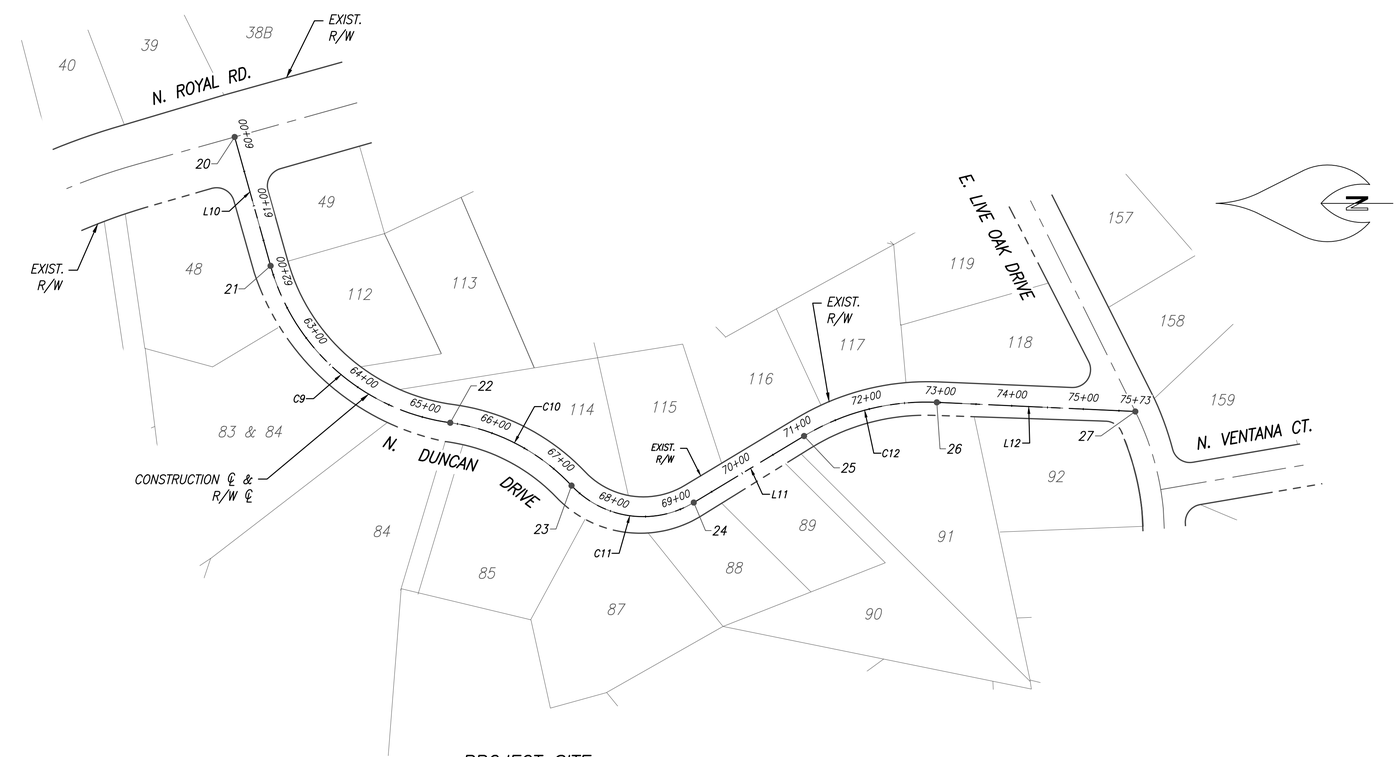

PROJECT SITE
1"=100'

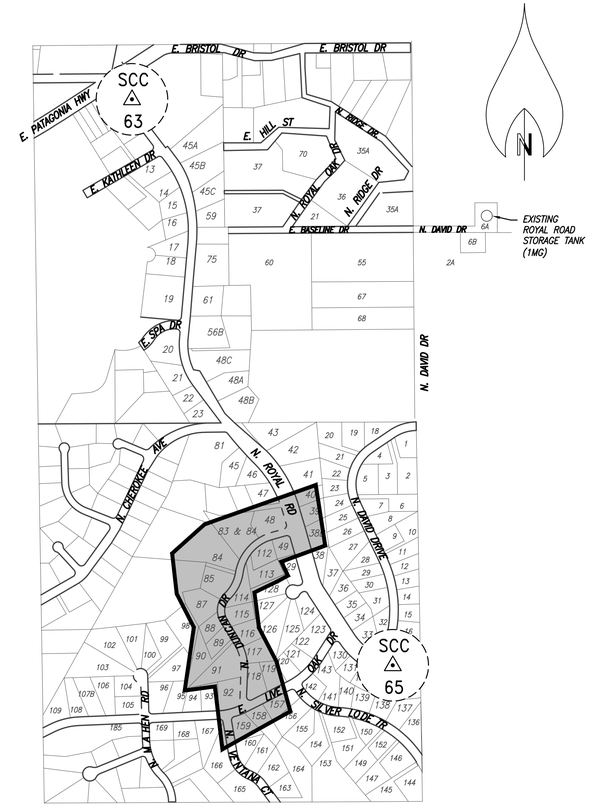

INSET KEYMAP
1"=500'

SANTA CRUZ COUNTY GIS CONTROL POINT DATA				
PT ID	NORTHING	EASTING	ELEVATION	DESCRIPTION
SCC 63	133075.1678	1015174.4187	3965.8206	3" ACP STAMPED SANTA CRUZ COUNTY GIS CONTROL POINT
SCC 65	129119.5940	1016996.6755	4007.2500	3" ACP STAMPED SANTA CRUZ COUNTY GIS CONTROL POINT

DATUM: ARIZONA STATE PLANE INT'L FT – CENTRAL ZONE

HORIZONTAL: NAD 83 VERTICAL: NAVD 88

NOTES:

1. SURVEY CONTROL POINTS LOCATED ALONG RIGHT-OF-WAY CENTERLINE, UNLESS OTHERWISE NOTED.
2. ALL STATIONING ALONG RIGHT-OF-WAY CENTERLINE. UNLESS OTHERWISE SPECIFIED ON THE PLANS.
3. FOR BASIS OF BEARINGS, BASIS OF ELEVATIONS & BASIS OF COORDINATES, SEE SHEET 4.

Contact Arizona 811 at least two full working days before you begin excavation
ARIZONA811
Call 811 or click Arizona811.com

Kimley»Horn

© 2022 KIMLEY-HORN AND ASSOCIATES, INC.
333 EAST WETMORE ROAD, SUITE 280
TUCSON, ARIZONA 85705 (520) 615-9191

NO.	BY	DATE	REVISION	APPR.	DATE

Registered Professional Engineer (Civil)
CERTIFICATE NO. 38413
RAY MONTOYA
Date Signed 08/22/22
ARIZONA, U.S.A.
Expires 12/31/23

CITY OF NOGALES
WATER MAIN REPLACEMENT
ROYAL ROAD

HORIZONTAL CONTROL
DUNCAN DRIVE

DESIGNED BY: ROM/GAG	DATE 07/22	SURVEY REQUEST NO.	6 of 33
DRAWN BY: KMT/DIM	DATE 07/22	SCALE: VERT.: NO SCALE HORIZ.: 1"=150'	PLAN NO.
CHECKED BY: ROM/RPM	DATE 08/22		

Plotted By:Gerardo.Gonzalez Date:October 13, 2022 File Path:K:\TUC_WaterResources\098036008_City Of Nogales\CADD\Water Plans Royal Road\3.201\3.201Royal Road Wtr Plans 4-11.dwg

POINT TABLE			
CP #	NORTHING	EASTING	DESCRIPTION
27	128812.88	1015941.62	ALIGN CL DUNCAN DR
28	128661.49	1014578.32	ALIGN CL LIVE OAK DR
29	128679.66	1014614.57	ALIGN CL LIVE OAK DR
30	128728.77	1014803.88	ALIGN CL LIVE OAK DR
31	128773.80	1015806.40	ALIGN CL LIVE OAK DR
32	128975.07	1016267.86	ALIGN CL LIVE OAK DR
33	129165.01	1016478.31	ALIGN CL LIVE OAK DR
34	129432.11	1016647.17	ALIGN CL LIVE OAK DR

LINE TABLE		
LINE #	BEARING	LENGTH
L13	N63°22'33"E	40.56
L14	N87°25'42"E	1003.54
L15	N63°33'58"E	364.34
L16	N32°18'04"E	316.00

CURVE TABLE				
CURVE #	RADIUS	LENGTH	DELTA	TANGENT
C13	467.22	197.03	24°09'42"	100.00
C14	393.17	141.51	20°37'19"	71.53
C15	526.00	287.03	31°15'55"	147.19

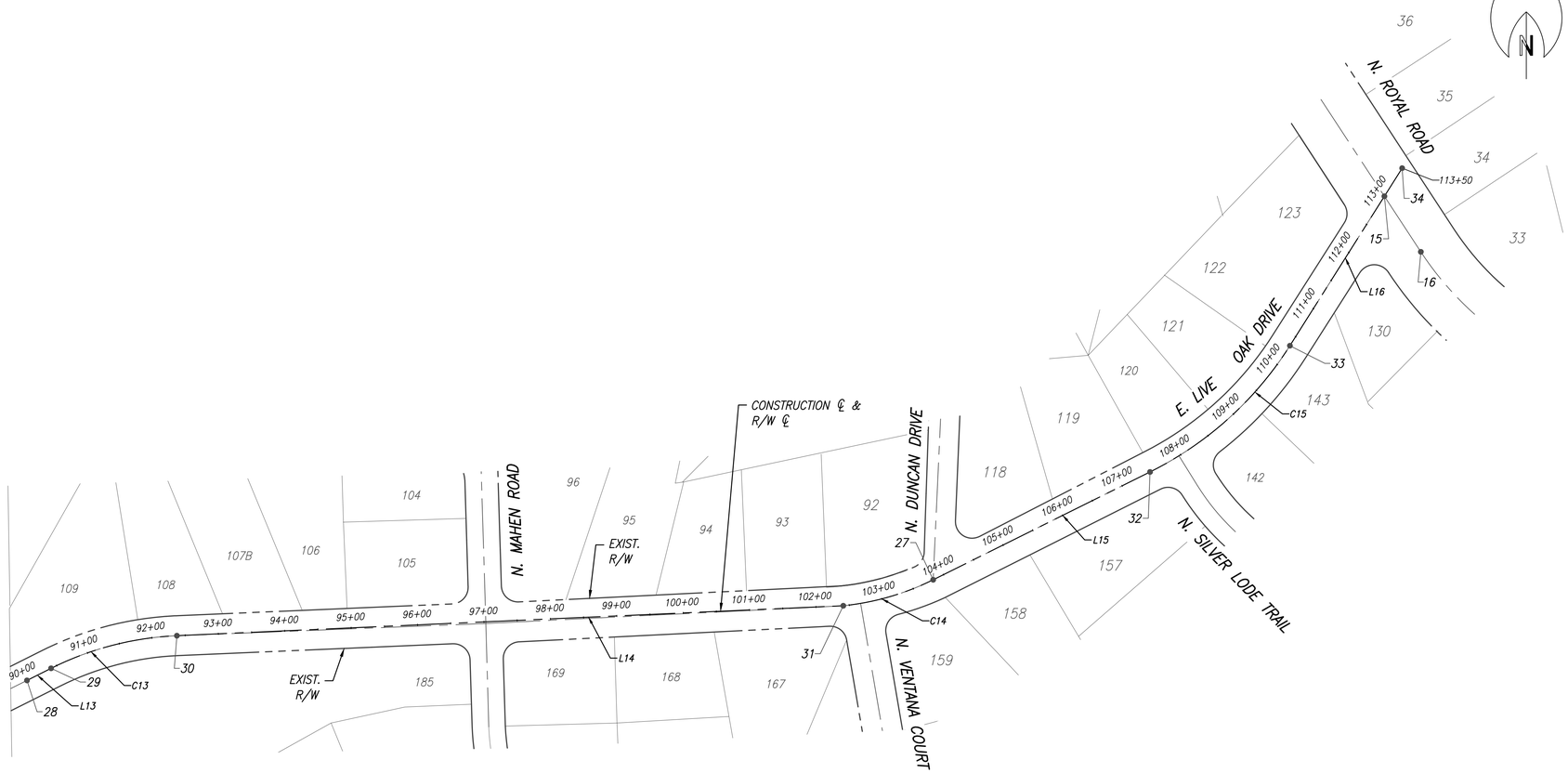

PROJECT SITE
1"=100'

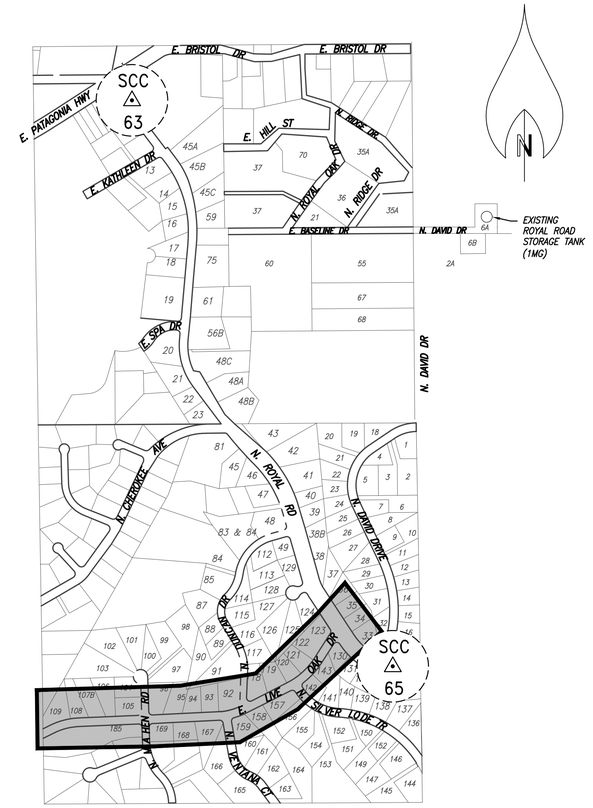

INSET KEYMAP
1"=500'

SANTA CRUZ COUNTY GIS CONTROL POINT DATA				
PT ID	NORTHING	EASTING	ELEVATION	DESCRIPTION
SCC 63	133075.1678	1015174.4187	3965.8206	3" ACP STAMPED SANTA CRUZ COUNTY GIS CONTROL POINT
SCC 65	129119.5940	1016996.6755	4007.2500	3" ACP STAMPED SANTA CRUZ COUNTY GIS CONTROL POINT

DATUM: ARIZONA STATE PLANE INT'L FT – CENTRAL ZONE

HORIZONTAL: NAD 83 VERTICAL: NAVD 88

NOTES:

1. SURVEY CONTROL POINTS LOCATED ALONG RIGHT-OF-WAY CENTERLINE, UNLESS OTHERWISE NOTED.
2. ALL STATIONING ALONG RIGHT-OF-WAY CENTERLINE. UNLESS OTHERWISE SPECIFIED ON THE PLANS.
3. FOR BASIS OF BEARINGS, BASIS OF ELEVATIONS & BASIS OF COORDINATES, SEE SHEET 4.

Contact Arizona 811 at least two full working days before you begin excavation
ARIZONA811
Call 811 or click Arizona811.com

Kimley»Horn
© 2022 KIMLEY-HORN AND ASSOCIATES, INC.
333 EAST WETMORE ROAD, SUITE 280
TUCSON, ARIZONA 85705 (520) 615-9191

NO.	BY	DATE	REVISION	APPR.	DATE

Registered Professional Engineer (Civil) CERTIFICATE NO. 38413 RAY MONTOYA Date Signed 08/22/22 ARIZONA, U.S.A.
Expires 12/31/23

CITY OF NOGALES
WATER MAIN REPLACEMENT
ROYAL ROAD

HORIZONTAL CONTROL
LIVE OAK DRIVE

DESIGNED BY: ROM/GAG	DATE 07/22	SURVEY REQUEST NO:	7 OF 33
DRAWN BY: KMT/DIM	DATE 07/22	SCALE: VERT.: NO SCALE HORIZ.: 1"=150'	PLAN NO.
CHECKED BY: ROM/RPM	DATE 08/22		

Plotted By:Gerardo.Gonzalez Date:October 13, 2022 File Path:K:\TUC_WaterResources\098036008_City Of Nogales\CADD\Water Plans Royal Road\3.201\3.201Royal Road Wtr Plans 4-11.dwg

POINT TABLE			
CP #	NORTHING	EASTING	DESCRIPTION
35	129117.29	1016918.63	ALIGN CL DAVID DR
36	129236.05	1016959.30	ALIGN CL DAVID DR
37	129870.28	1016922.44	ALIGN CL DAVID DR
38	130252.79	1016739.52	ALIGN CL DAVID DR
39	130637.06	1016843.87	ALIGN CL DAVID DR
40	130737.81	1016992.91	ALIGN CL DAVID DR
41	130790.74	1017160.75	ALIGN CL DAVID DR

LINE TABLE		
LINE #	BEARING	LENGTH
L17	N18°54'23"E	125.53
L18	N25°33'30"W	424.00
L19	N55°56'30"E	179.90

CURVE TABLE				
CURVE #	RADIUS	LENGTH	DELTA	TANGENT
C16	839.54	651.53	44°27'53"	343.16
C17	305.00	433.85	81°30'03"	262.81
C18	308.79	178.46	33°06'47"	91.80

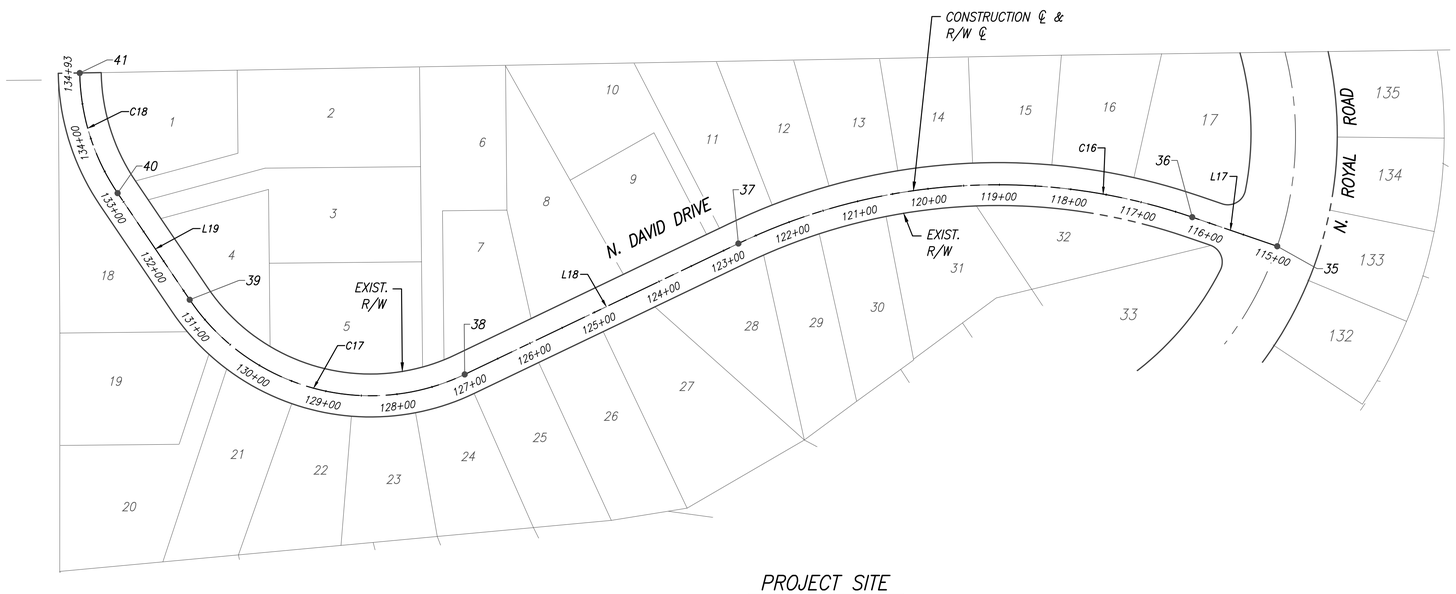

PROJECT SITE
1"=100'

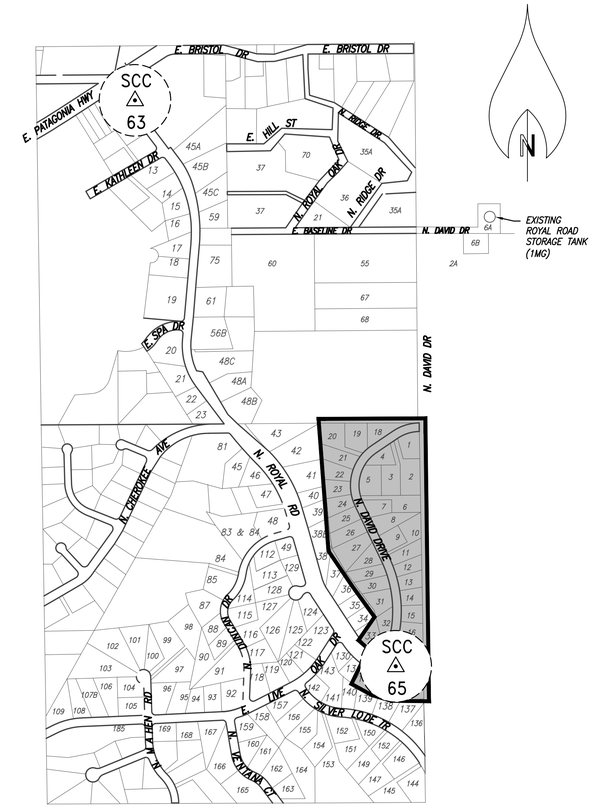

INSET KEYMAP
1"=500'

SANTA CRUZ COUNTY GIS CONTROL POINT DATA				
PT ID	NORTHING	EASTING	ELEVATION	DESCRIPTION
SCC 63	133075.1678	1015174.4187	3965.8206	3" ACP STAMPED SANTA CRUZ COUNTY GIS CONTROL POINT
SCC 65	129119.5940	1016996.6755	4007.2500	3" ACP STAMPED SANTA CRUZ COUNTY GIS CONTROL POINT

DATUM: ARIZONA STATE PLANE INT'L FT – CENTRAL ZONE

HORIZONTAL: NAD 83 VERTICAL: NAVD 88

NOTES:

1. SURVEY CONTROL POINTS LOCATED ALONG RIGHT-OF-WAY CENTERLINE, UNLESS OTHERWISE NOTED.
2. ALL STATIONING ALONG RIGHT-OF-WAY CENTERLINE. UNLESS OTHERWISE SPECIFIED ON THE PLANS.
3. FOR BASIS OF BEARINGS, BASIS OF ELEVATIONS & BASIS OF COORDINATES, SEE SHEET 4.

Contact Arizona 811 at least two full working days before you begin excavation
ARIZONA811
Call 811 or click Arizona811.com

Kimley»Horn
© 2022 KIMLEY-HORN AND ASSOCIATES, INC.
333 EAST WETMORE ROAD, SUITE 280
TUCSON, ARIZONA 85705 (520) 615-9191

NO.	BY	DATE	REVISION	APPR.	DATE

Registered Professional Engineer (Civil) CERTIFICATE NO. 38413 RAY MONTOYA Date Signed 10/27/22 ARIZONA, U.S.A.
Expires 12/31/23

CITY OF NOGALES
WATER MAIN REPLACEMENT
ROYAL ROAD

HORIZONTAL CONTROL
DAVID DRIVE

DESIGNED BY: ROM/GAG	DATE 07/22	SURVEY REQUEST NO.	8 OF 33
DRAWN BY: KMT/DIM	DATE 07/22	SCALE: VERT.: NO SCALE HORIZ.: 1"=150'	PLAN NO.
CHECKED BY: ROM/RPM	DATE 08/22		

Plotted By:Gerardo.Gonzalez Date:October 13, 2022 File Path:K:\TUC_WaterResources\098036008_City Of Nogales\CADD\Water Plans Royal Road.3.201\3.201Royal Road Wtr Plans 4-11.dwg

POINT TABLE			
CP #	NORTHING	EASTING	DESCRIPTION
42	129020.97	1016297.97	ALIGN CL SILVER LODE TR
43	128954.86	1016339.06	ALIGN CL SILVER LODE TR
44	128792.51	1016613.17	ALIGN CL SILVER LODE TR
45	128431.06	1017199.64	ALIGN CL SILVER LODE TR

LINE TABLE		
LINE #	BEARING	LENGTH
L20	S31°51'50"E	77.84

CURVE TABLE				
CURVE #	RADIUS	LENGTH	DELTA	TANGENT
C19	345.00	331.14	54°59'41"	179.58
C20	721.74	718.17	57°00'45"	391.97

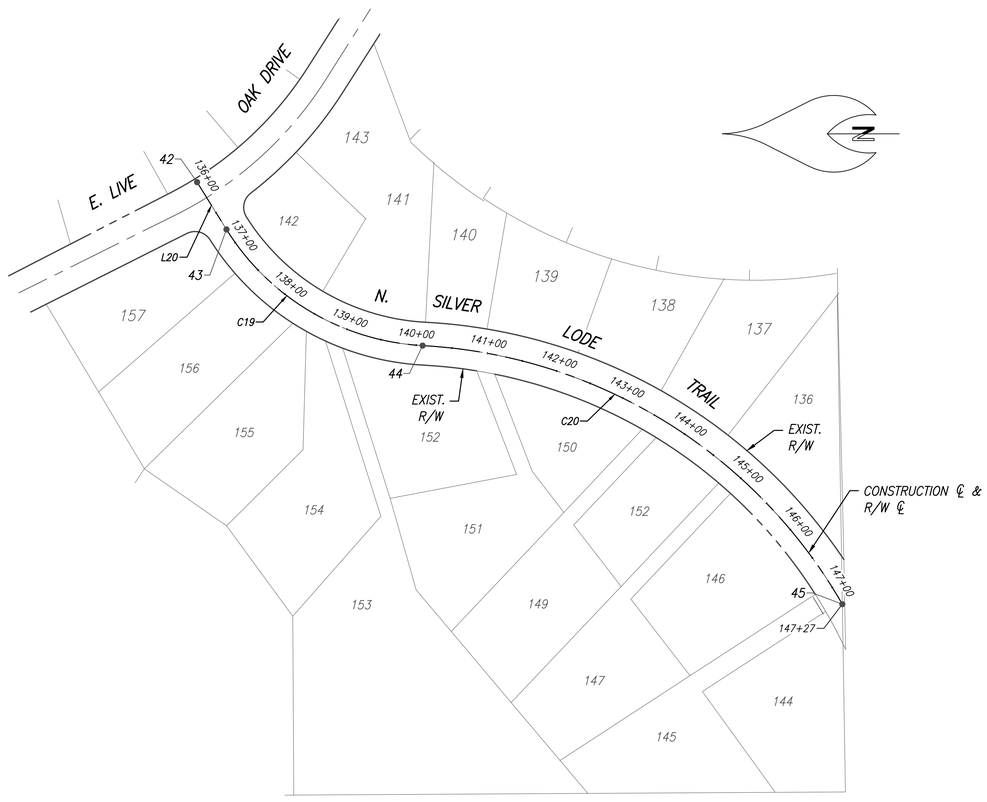

PROJECT SITE
1"=100'

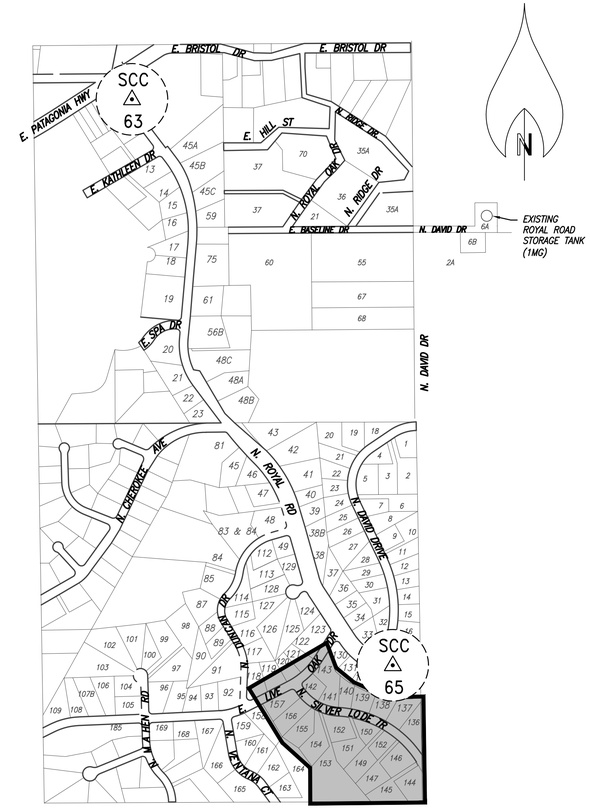

INSET KEYMAP
1"=500'

SANTA CRUZ COUNTY GIS CONTROL POINT DATA				
PT ID	NORTHING	EASTING	ELEVATION	DESCRIPTION
SCC 63	133075.1678	1015174.4187	3965.8206	3" ACP STAMPED SANTA CRUZ COUNTY GIS CONTROL POINT
SCC 65	129119.5940	1016996.6755	4007.2500	3" ACP STAMPED SANTA CRUZ COUNTY GIS CONTROL POINT

DATUM: ARIZONA STATE PLANE INT'L FT – CENTRAL ZONE

HORIZONTAL: NAD 83 VERTICAL: NAVD 88

NOTES:

1. SURVEY CONTROL POINTS LOCATED ALONG RIGHT-OF-WAY CENTERLINE, UNLESS OTHERWISE NOTED.
2. ALL STATIONING ALONG RIGHT-OF-WAY CENTERLINE. UNLESS OTHERWISE SPECIFIED ON THE PLANS.
3. FOR BASIS OF BEARINGS, BASIS OF ELEVATIONS & BASIS OF COORDINATES, SEE SHEET 4.

Contact Arizona 811 at least two full working days before you begin excavation
ARIZONA811
Call 811 or click Arizona811.com

Kimley»Horn
© 2022 KIMLEY-HORN AND ASSOCIATES, INC.
333 EAST WETMORE ROAD, SUITE 280
TUCSON, ARIZONA 85705 (520) 615-9191

NO.	BY	DATE	REVISION	APPR.	DATE

Registered Professional Engineer (Civil)
CERTIFICATE NO. 38413
RAY MONTOYA
Date Signed 08/22/22
ARIZONA, U.S.A.
Expires 12/31/23

CITY OF NOGALES
WATER MAIN REPLACEMENT
ROYAL ROAD

HORIZONTAL CONTROL
SILVER LODE TRAIL

DESIGNED BY: ROM/GAG	DATE 07/22	SURVEY REQUEST NO:	9 OF 33
DRAWN BY: KMT/DIM	DATE 07/22	SCALE: VERT.: NO SCALE HORIZ.: 1"=150'	PLAN NO:
CHECKED BY: ROM/RPM	DATE 08/22		

Plotted By:Gerardo.Gonzalez Date:October 13, 2022 File Path:K:\TUC_WaterResources\098036008_City Of Nogales\CADD\Water Plans Royal Road.3.201\3.201Royal Road Wtr Plans 4-11.dwg

POINT TABLE			
CP #	NORTHING	EASTING	DESCRIPTION
46	128806.91	1015827.41	ALIGN CL VENTANA CT
47	128502.18	1015879.61	ALIGN CL VENTANA CT
48	128351.55	1015999.30	ALIGN CL VENTANA CT
49	128288.13	1016081.12	ALIGN CL VENTANA CT
50	128163.61	1016173.86	ALIGN CL VENTANA CT
51	128717.11	1015269.59	ALIGN CL MAHEN RD
52	129067.43	1015258.89	ALIGN CL MAHEN RD

LINE TABLE		
LINE #	BEARING	LENGTH
L21	S09°43'14"E	309.16
L22	S36°40'44"E	155.26
L23	N01°45'00"W	375.00

CURVE TABLE				
CURVE #	RADIUS	LENGTH	DELTA	TANGENT
C21	200.00	200.71	57°30'00"	109.72
C22	200.00	104.72	30°00'00"	53.59

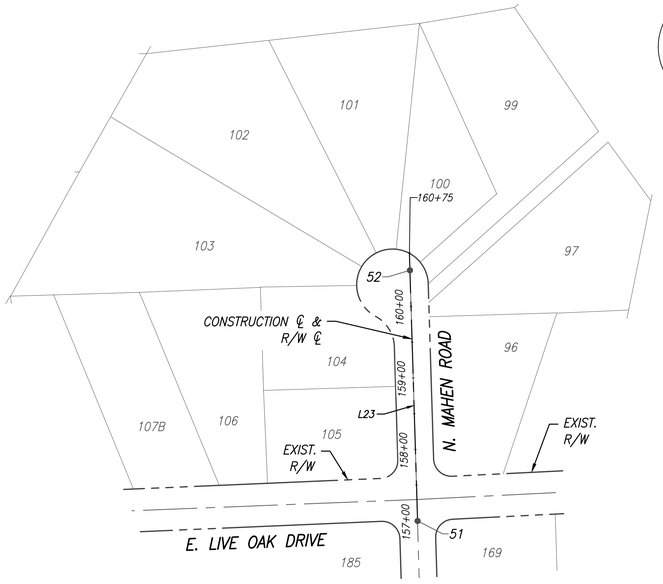

PROJECT SITE
1"=100'

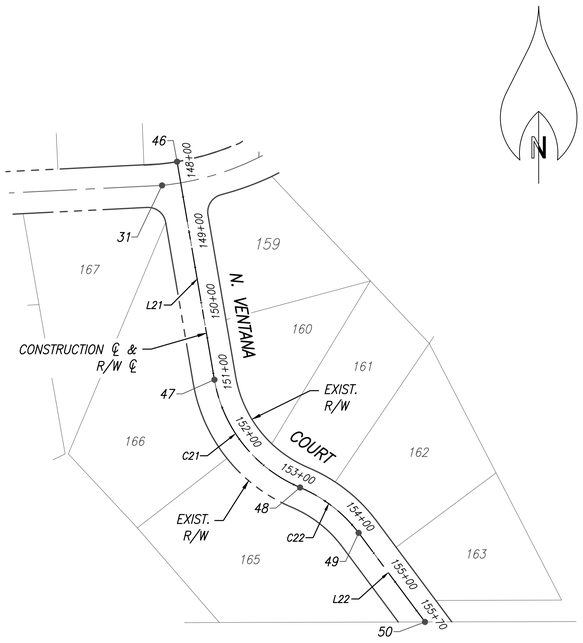

PROJECT SITE
1"=100'

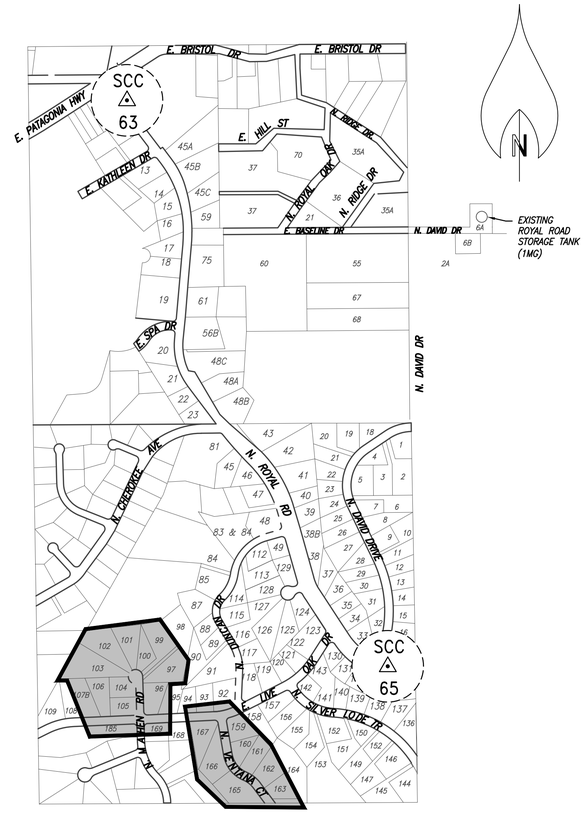

INSET KEYMAP
1"=500'

SANTA CRUZ COUNTY GIS CONTROL POINT DATA				
PT ID	NORTHING	EASTING	ELEVATION	DESCRIPTION
SCC 63	133075.1678	1015174.4187	3965.8206	3" ACP STAMPED SANTA CRUZ COUNTY GIS CONTROL POINT
SCC 65	129119.5940	1016996.6755	4007.2500	3" ACP STAMPED SANTA CRUZ COUNTY GIS CONTROL POINT

DATUM: ARIZONA STATE PLANE INT'L FT – CENTRAL ZONE

HORIZONTAL: NAD 83 VERTICAL: NAVD 88

NOTES:

1. SURVEY CONTROL POINTS LOCATED ALONG RIGHT-OF-WAY CENTERLINE, UNLESS OTHERWISE NOTED.
2. ALL STATIONING ALONG RIGHT-OF-WAY CENTERLINE. UNLESS OTHERWISE SPECIFIED ON THE PLANS.
3. FOR BASIS OF BEARINGS, BASIS OF ELEVATIONS & BASIS OF COORDINATES, SEE SHEET 4.

Contact Arizona 811 at least two full working days before you begin excavation
ARIZONA811
Call 811 or click Arizona811.com

Kimley»Horn

© 2022 KIMLEY-HORN AND ASSOCIATES, INC.
333 EAST WETMORE ROAD, SUITE 280
TUCSON, ARIZONA 85705 (520) 615-9191

NO.	BY	DATE	REVISION	APPR.	DATE

Registered Professional Engineer (Civil)
38413
RAY MONTOYA
Date Signed 08/22/22
ARIZONA, U.S.A.
Expires 12/31/23

CITY OF NOGALES
WATER MAIN REPLACEMENT
ROYAL ROAD

HORIZONTAL CONTROL
MAHEN ROAD & VENTANA COURT

DESIGNED BY: ROM/GAG	DATE 07/22	SURVEY REQUEST NO.	10 OF 33
DRAWN BY: KMT/DIM	DATE 07/22	SCALE: VERT.: NO SCALE HORIZ.: 1"=150'	PLAN NO.
CHECKED BY: ROM/RPM	DATE 08/22		

Plotted By:Gerardo.Gonzalez Date:October 13, 2022 File Path:K:\TUC_WaterResources\0980360008_City Of Nogales\CADD\Water Plans Royal Road.3.201\3.201Royal Road Wtr Plans 4-11.dwg

POINT TABLE			
CP #	NORTHING	EASTING	DESCRIPTION
53	132121.76	1015771.30	ALIGN CL BASELINE DR
54	132148.40	1015838.50	ALIGN CL BASELINE DR
55	132148.41	1015860.29	ALIGN CL BASELINE DR
56	132169.82	1015881.66	ALIGN CL BASELINE DR
57	132181.25	1017596.96	ALIGN CL BASELINE DR
58	132223.52	1017636.44	ALIGN CL BASELINE DR
59	132223.52	1017651.31	ALIGN CL BASELINE DR
60	132231.52	1017651.30	ALIGN CL BASELINE DR

LINE TABLE		
LINE #	BEARING	LENGTH
L24	N69°22'00"E	72.28
L25	N89°57'28"E	21.79
L26	N44°57'28"E	30.25
L27	N89°37'03"E	1633.66
L28	N43°02'34"E	57.84
L29	N90°00'00"E	14.88
L30	N00°06'46"W	8.00

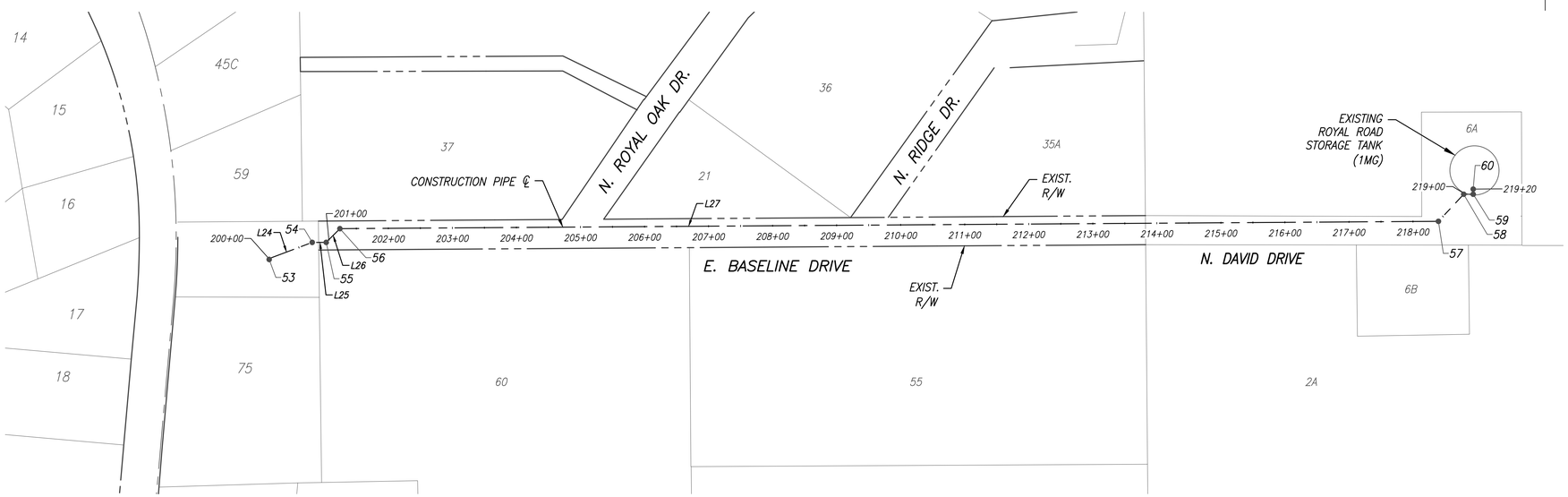

PROJECT SITE
1"=100'

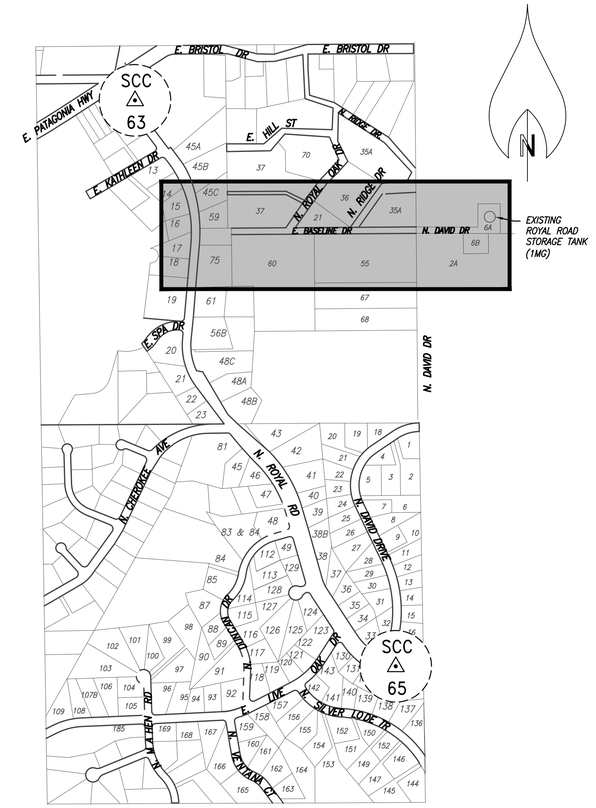

INSET KEYMAP
1"=500'

SANTA CRUZ COUNTY GIS CONTROL POINT DATA				
PT ID	NORTHING	EASTING	ELEVATION	DESCRIPTION
SCC 63	133075.1678	1015174.4187	3965.8206	3" ACP STAMPED SANTA CRUZ COUNTY GIS CONTROL POINT
SCC 65	129119.5940	1016996.6755	4007.2500	3" ACP STAMPED SANTA CRUZ COUNTY GIS CONTROL POINT

DATUM: ARIZONA STATE PLANE INT'L FT – CENTRAL ZONE

HORIZONTAL: NAD 83 VERTICAL: NAVD 88

NOTES:

1. SURVEY CONTROL POINTS LOCATED ALONG CONSTRUCTION & PIPE CENTERLINE, UNLESS OTHERWISE NOTED.
2. ALL STATIONING ALONG PIPE CENTERLINE. UNLESS OTHERWISE SPECIFIED ON THE PLANS.
3. FOR BASIS OF BEARINGS, BASIS OF ELEVATIONS & BASIS OF COORDINATES, SEE SHEET 4.

Contact Arizona 811 at least two full working days before you begin excavation
ARIZONA811
Call 811 or click Arizona811.com

Kimley»Horn
© 2022 KIMLEY-HORN AND ASSOCIATES, INC.
333 EAST WETMORE ROAD, SUITE 280
TUCSON, ARIZONA 85705 (520) 615-9191

NO.	BY	DATE	REVISION	APPR.	DATE

Registered Professional Engineer (Civil)
CERTIFICATE NO. 38413
RAY MONTOYA
Date Signed 08/22/22
ARIZONA, U.S.A.
Expires 12/31/23

CITY OF NOGALES
WATER MAIN REPLACEMENT
ROYAL ROAD

HORIZONTAL CONTROL
STORAGE TANK WATERLINE

DESIGNED BY: ROM/GAG	DATE: 07/22	SURVEY REQUEST NO.	11 OF 33
DRAWN BY: KMT/DIM	DATE: 07/22	SCALE: VERT.: NO SCALE HORIZ.: 1"=150'	PLAN NO.
CHECKED BY: ROM/RPM	DATE: 08/22		

Plotted By:Gerardo.Gonzalez Date:October 13, 2022 File Path:K:\TUC_WaterResources\098036008_City Of Nogales\CADD\Water Plans Royal Road.3.201\3.201Royal Road Wtr Plans 4-11.dwg

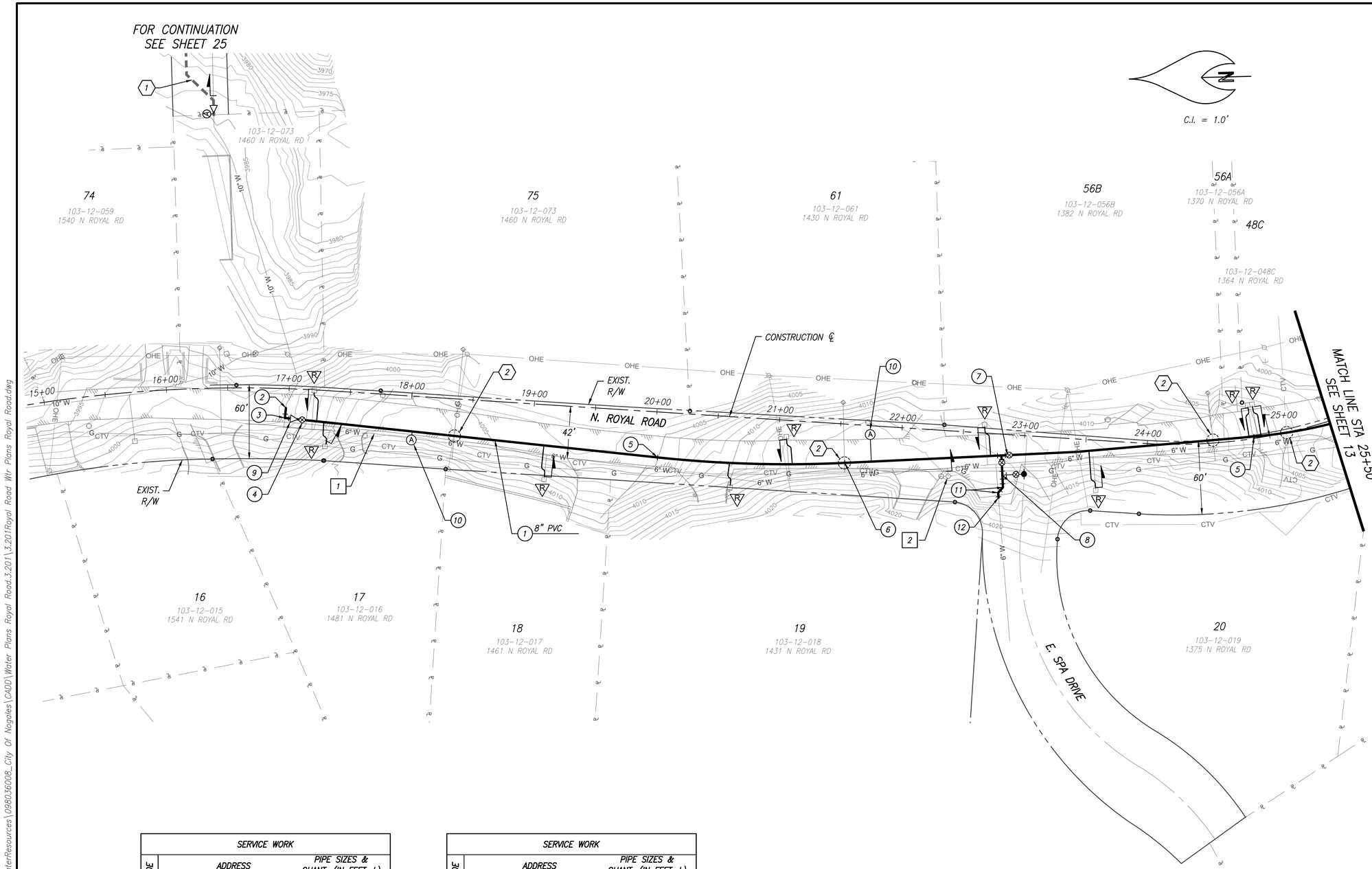

REMOVE/ ABANDON NOTES

1	STA:16+97, 32'RT TO STA:25+50, OFF:13'RT ABANDON EXIST. 6" WATER IN PLACE	±853 LF
2	STA:22+40, OFF:37'RT REMOVE & SALVAGE EXIST. FIRE HYDRANT	1 EA

CONSTRUCTION NOTES

1	STA:16+98, OFF:16'RT TO STA:25+50, OFF:2'RT 8" PVC DR14 (CL305) PIPE PER TW SD-115 & SD-650	±863 LF
2	STA:16+98, OFF:16'RT 10" CONNECTION	1 EA
3	STA:16+97, OFF:24'RT 10" 90° BEND	
4	STA:17+12, OFF:25'RT 8" GATE VALVE, B&C PER TW SD-300	1 EA
5	STA:20+03, 37'RT, STA:24+87, OFF:2'LT BEGIN CURVE, ANGLE PT	
6	STA:21+55, OFF:32'RT END CURVE, ANGLE PT	
7	STA:22+82, OFF:17'RT (LOCATION OF TEE) 8" x 6" TEE PER TW SD-600 8" GATE VALVE, B&C PER TW SD-300 6" GATE VALVE, B&C PER TW SD-300 2" DVA PER TW SD-400	 1 EA (NPI) 1 EA 1 EA 1 EA
8	STA:23+01, OFF:31'RT FIRE HYDRANT ASSEMBLY PER TW SD-500 6" GATE VALVE, B&C PER TW SD-300 8" x 6" TEE PER TW SD-600 6" DI (CL350) PIPE PER TW SD-115 & SD-650	 1 EA 1 EA 1 EA (NPI) ±16 LF
9	STA:17+02, OFF:24'RT 8" X 6" REDUCER	1 EA
10	STA:18+02, OFF:36'RT, STA:21+74, OFF:7'RT (LOCATION OF ARV) 1" COMBINATION ARV PER TW SD-331 STA:18+02, OFF:29'RT, STA:21+77, OFF:29'RT (LOCATION OF SADDLE) 1" CU PIPE	 2 EA ±29 LF
11	STA:22+81, OFF:48'RT, STA:22+85, OFF:43'RT 6" 45° BEND PER TW SD-600	2 EA (NPI)
12	STA:22+82, OFF:52'RT 6" CONNECTION	1 EA

REFERENCE NOTES

1. SEE SHEET 25 FOR STORAGE TANK WATERLINE
2. UTILITY CROSSING SEE "NEW MAIN LOWERING" DETAIL ON SHEET 29

SERVICE WORK

CODE		ADDRESS / METER NUMBER & SIZE		PIPE SIZES & QUANT. (IN FEET ±) ¾"	1"	1 ½"	2"
1	R	1460 N ROYAL RD	1"		±39'		
2	R	1481 N ROYAL RD	1"		±18'		
3	R	1461 N ROYAL RD	1"		±25'		
4	R	1431 N ROYAL RD	1"		±25'		
5	R	1430 N ROYAL RD	1"		±21'		
6	R	1382 N ROYAL RD	1"		±24' ±24'		
7	R	1370 N ROYAL RD	1"		±24'		
8	R	1375 N ROYAL RD	1"		±31'		

SERVICE WORK

CODE		ADDRESS / METER NUMBER & SIZE		PIPE SIZES & QUANT. (IN FEET ±) ¾"	1"	1 ½"	2"
9	R	1375 N ROYAL RD	1"		±31'		
TOTAL QUANTITIES OF CU PIPE FOR SERVICE WORK ONLY					±262'		

NOTES

1. SEE SHEET 4 FOR CONTROL PLAN.
2. SEE TW SD-309 AND SD-310 FOR ALL WATER SERVICE RENEWALS.

Contact Arizona 811 at least two full working days before you begin excavation
ARIZONA811
Call 811 or click Arizona811.com

Kimley»Horn

© 2022 KIMLEY-HORN AND ASSOCIATES, INC.
333 EAST WETMORE ROAD, SUITE 280
TUCSON, ARIZONA 85705 (520) 615-9191

NO.	BY	DATE	REVISION	APPR.	DATE

Registered Professional Engineer (Civil) CERTIFICATE NO. 38413 RAY MONTOYA Date Signed 10/27/22 ARIZONA, U.S.A.
Expires 12/31/23

CITY OF NOGALES
WATER MAIN REPLACEMENT
ROYAL ROAD

ROYAL ROAD
STA 16+97 TO STA 25+50

DESIGNED BY: ROM/GAG	DATE 07/22	SURVEY REQUEST NO.	12 OF 33
DRAWN BY: KMT/DIM	DATE 07/22	SCALE: VERT.: NO SCALE HORIZ.: 1"=40'	PLAN NO.
CHECKED BY: ROM/RPM	DATE 08/22		

Plotted By:Karli.Timlin Date:October 13, 2022 File Path:K:\TUC_WaterResources\098036008_City Of Nogales\CADD\Water Plans Royal Road.3.201\3.201Royal Road Wtr Plans Royal Road.dwg

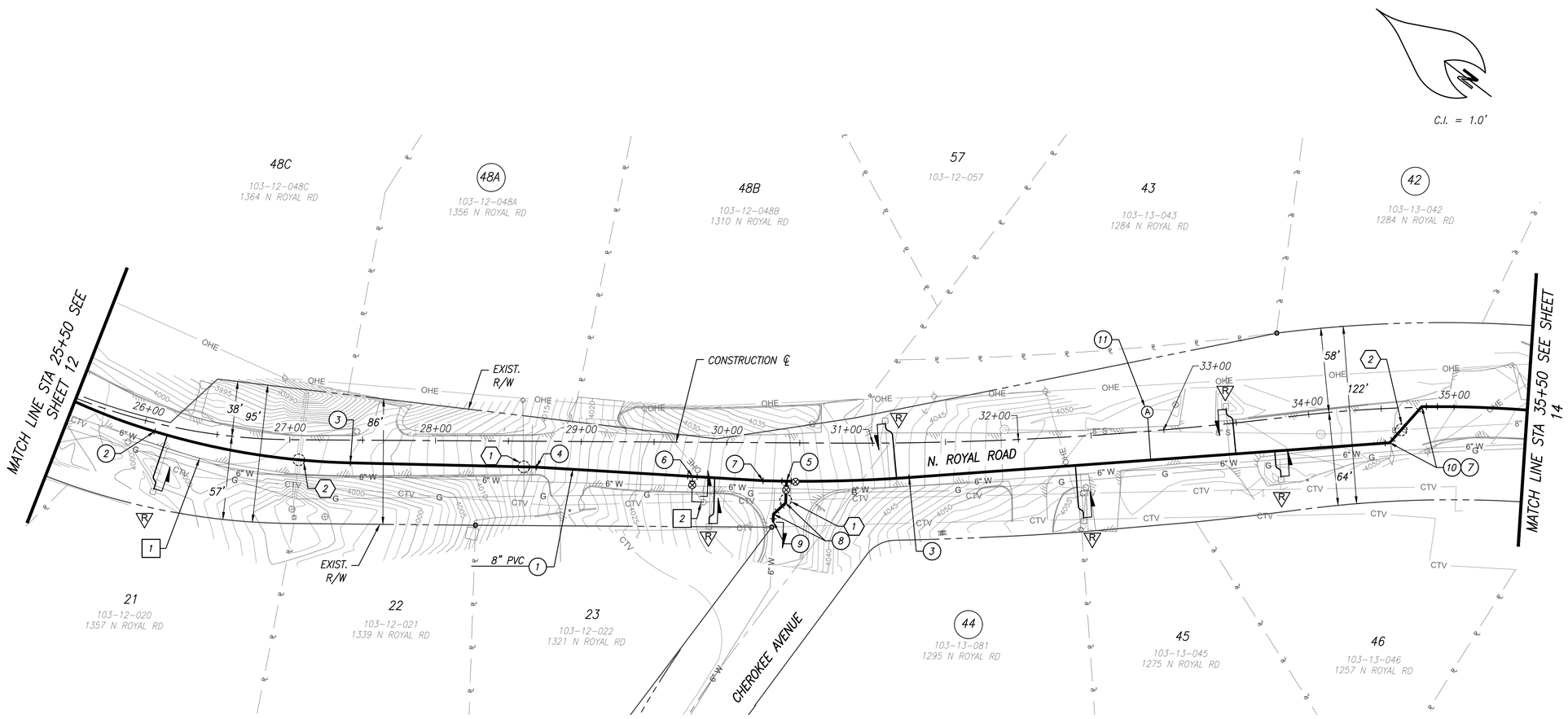

REMOVE/ ABANDON NOTES

1	STA:25+50, OFF:13'RT TO STA:35+50, OFF:24'RT ABANDON EXIST 6" WATER IN PLACE	±1000 LF
2	STA:29+84, OFF:41'RT REMOVE & SALVAGE EXIST. FIRE HYDRANT	1 EA

CONSTRUCTION NOTES

1	STA:25+50, OFF:2'RT TO STA:35+50, OFF:0'RT 8" PVC DR14 (CL 305) PIPE PER TW SD-115 & SD-650	±987 LF
2	STA:26+08, OFF:6'RT POINT OF COMPOUND CURVE, ANGLE PT	
3	STA:27+42, OFF:16'RT, STA:31+25, OFF:24'RT END CURVE, ANGLE PT	
4	STA:28+69, OFF:18'RT ANGLE PT	
5	STA:30+41, OFF:26'RT (LOCATION OF TEE) 6" GATE VALVE, B&C PER TW SD-300 8" GATE VALVE, B&C PER TW SD-300 8" x 6" TEE PER TW SD-600 6" PVC DR14 (CL 305) PIPE PER TW SD-115 & SD-650	 1 EA 1 EA 1 EA (NPI) ±31 LF
6	STA:29+77, OFF:24'RT FIRE HYDRANT ASSEMBLY PER TW SD-500 8" X 6" TEE PER TW SD-600 6" GATE VALVE, B&C PER TW SD-300 6" DI (CL350) PIPE PER TW SD-115 & SD-650	 1 EA 1 EA 1 EA ±25 LF
7	STA:30+25, OFF:26'RT, STA:34+78, OFF:0'LT BEGIN CURVE, ANGLE PT	
8	STA:30+41, OFF:41'RT, STA:30+32, OFF:49'RT 6" 45° BEND PER TW SD-600	2 EA (NPI)
9	STA:30+32, OFF:54'RT 6" CONNECTION	1 EA
10	STA:34+55, OFF:24'RT, STA:34+78, OFF:0'LT 8" 45° BEND PER TW SD-600	2 EA (NPI)
11	STA:32+90, OFF:13'LT (LOCATION OF ARV) 1" COMBINATION ARV PER TW SD-331 STA:32+89, OFF:20'RT (LOCATION OF SADDLE) 1" CU PIPE	 1 EA ±8 LF

REFERENCE NOTES

1. UTILITY CROSSING, SEE "NEW MAIN LOWERING" DETAIL ON SHEET 29
2. SEE SHEET 27 FOR STORM AND SEWER CROSSING PROFILE.

SERVICE WORK

CODE		ADDRESS / METER NUMBER & SIZE		PIPE SIZES & QUANT. (IN FEET ±) ¾"	1"	1 ½"	2"
1	R	1357 N ROYAL RD	1"		±38'		
2	R	1321 N ROYAL RD M03498	1"		±32'		
3	R	1310 N ROYAL RD M03503	1"		±38'		
4	R	1275 N ROYAL RD	1"		±36'		
5	R	1284 N ROYAL RD	1" 1"		±31' ±30'		
6	R	1257 N ROYAL RD	1"		±18'		
7	R	1356 N ROYAL RD	1"		±35'		
8	R	1295 N ROYAL RD	1"		±45'		
TOTAL QUANTITIES OF CU PIPE FOR SERVICE WORK ONLY					±303'		

LEGEND

- (48A) METER NOT LOCATED
- (42) SEE SHEET 14 FOR METER LOCATION
- (44) METER NOT LOCATED

NOTES

1. SEE SHEETS 4 & 5 FOR CONTROL PLAN.
2. SEE TW SD-309 AND SD-310 FOR ALL WATER SERVICE RENEWALS.

Contact Arizona 811 at least two full working days before you begin excavation
ARIZONA811
Call 811 or click Arizona811.com

Kimley»Horn
© 2022 KIMLEY-HORN AND ASSOCIATES, INC.
333 EAST WETMORE ROAD, SUITE 280
TUCSON, ARIZONA 85705 (520) 615-9191

NO.	BY	DATE	REVISION	APPR.	DATE

Registered Professional Engineer (Civil)
CERTIFICATE NO. 38413
RAY MONTOYA
Date Signed 08/22/22
ARIZONA, U.S.A.
Expires 12/31/23

CITY OF NOGALES
WATER MAIN REPLACEMENT
ROYAL ROAD

ROYAL ROAD
STA 25+50 TO STA 35+50

DESIGNED BY: ROM/GAG	DATE 07/22	SURVEY REQUEST NO.	13 OF 33
DRAWN BY: KMT/DIM	DATE 07/22	SCALE: VERT.: NO SCALE HORIZ.: 1"=40'	PLAN NO.
CHECKED BY: ROM/RPM	DATE 08/22		

Plotted By:Karli.Timlin Date:October 13, 2022 File Path:K:\TUC_WaterResources\098036008_City Of Nogales\CADD\Water Plans Royal Road.3.201\3.201Royal Road Wtr Plans Royal Road.dwg

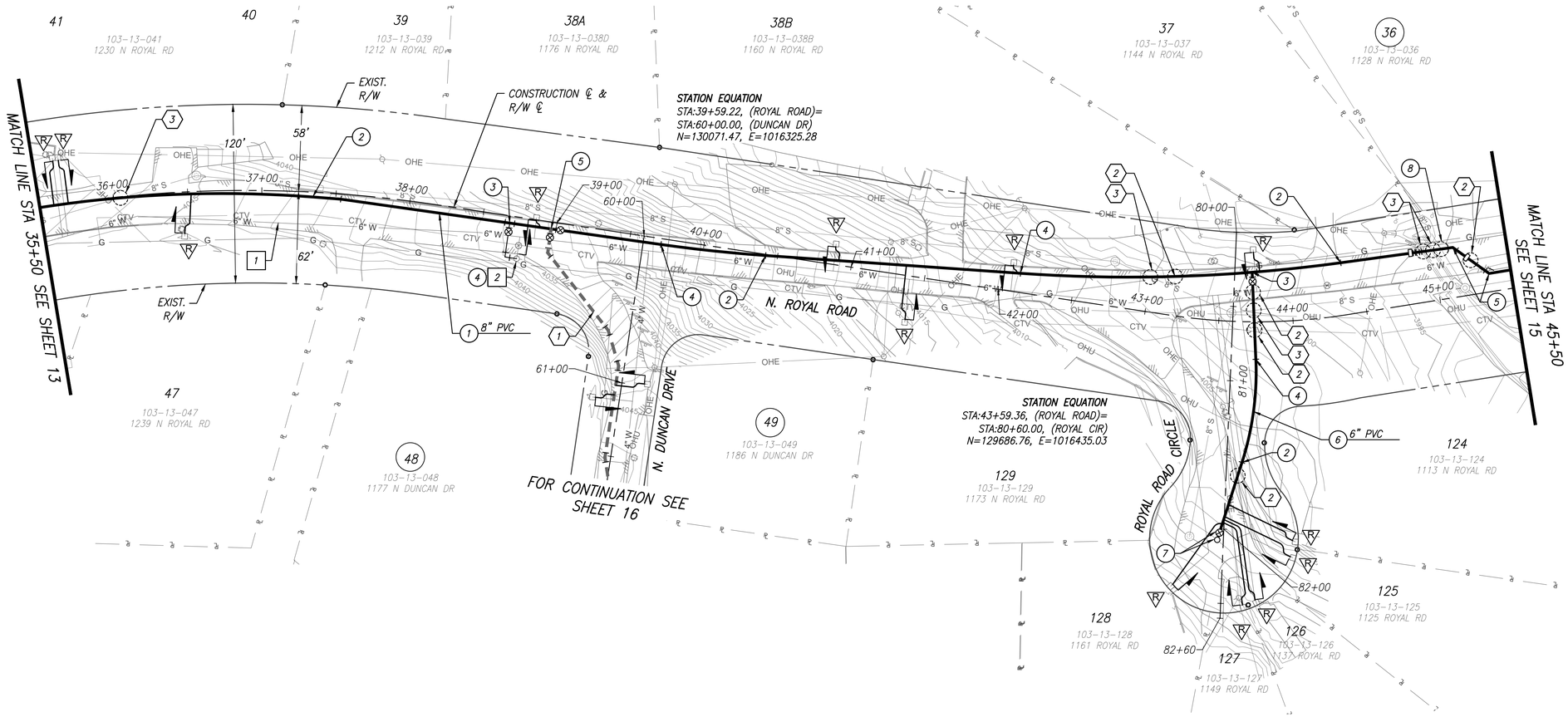

C.I. = 1.0'

REMOVE/ ABANDON NOTES

1	STA:35+50, OFF:24'RT TO STA:45+50, OFF:24'LT ABANDON EXIST. 6" WATER IN PLACE	±1000 LF
2	STA:38+77, OFF:28'RT REMOVE & SALVAGE EXIST. FIRE HYDRANT	1 EA

CONSTRUCTION NOTES

1	STA:35+50, OFF:0'RT TO STA:45+50, OFF:12'LT 8" PVC DR14 (CL305) PIPE PER TW SD-115 & SD-650	±987 LF
2	STA:37+34, OFF:3'RT, STA:40+42, OFF:1'RT STA:44+38, OFF:35'LT, STA:81+55, OFF:10'LT END CURVE, ANGLE PT	
3	STA:38+69, OFF:5'RT FIRE HYDRANT ASSEMBLY PER TW SD-500 6" GATE VALVE, B&C PER TW SD-300 8" X 6" TEE PER TW SD-600 6" DI (CL350) PIPE PER TW SD-115 & SD-650	 1 EA 1 EA 1 EA ±31 LF
4	STA:39+71, OFF:4'RT, STA:42+13, OFF:13'LT STA:80+85, OFF:17'LT BEGIN CURVE, ANGLE PT	
5	STA:45+14, OFF:33'LT, STA:45+35, OFF:12'LT 8" 45° BEND PER TW SD-300	2 EA (NPI)
6	STA:80+26, OFF:12'LT TO STA:82+07, OFF:4'RT 8" X 8" TEE PER TW SD-300 6" GATE VALVE, B&C PER TW SD-300 6" PVC DR14 (CL305) PIPE PER TW SD-115 & SD-650	 1 EA (NPI) 1 EA ±181 LF
7	STA:82+03, OFF:3'RT (LOCATION OF VALVE) 6" GATE VALVE, B&C PER TW SD-300 STA:82+13, OFF:11'LT (LOCATION OF DVA) 2" DVA PER TW SD-400	 1 EA 1 EA
8	8" DI (CL305) PIPE AT WATER CROSSING PER DETAIL ON SHEET 29 SEE SHEET 27 FOR SEWER CROSSING PROFILES, PROTECT IN PLACE	±13 LF

REFERENCE NOTES

1. SEE SHEET 16 FOR LATERAL WATER MAIN.
2. UTILITY CROSSING, SEE "NEW MAIN LOWERING" DETAIL ON SHEET 29
3. SEE SHEET 27 FOR STORM AND SEWER CROSSING PROFILES.

SERVICE WORK

CODE		ADDRESS / METER NUMBER & SIZE		PIPE SIZES & QUANT. (IN FEET ±) ¾"	1"	1 ½"	2"
1	R	1230 N ROYAL RD	1"		±30'		
2	R	1239 N ROYAL RD M03501	1"		±27'		
3	R	1176 N ROYAL RD	1"		±4'		
4	R	1160 N ROYAL RD M03469	1"		±9' ±5'		
5	R	1173 N ROYAL RD	1"		±36'		
6	R	1144 N ROYAL RD M03468	1"		±13'		
7	R	1161 N ROYAL RD	1"		±48'		
8	R	1149 N ROYAL RD M03465	1"		±60'		

SERVICE WORK

CODE		ADDRESS / METER NUMBER & SIZE		PIPE SIZES & QUANT. (IN FEET ±) ¾"	1"	1 ½"	2"
9	R	1137 N ROYAL RD	1"		±60'		
10	R	1125 N ROYAL RD M03466	1"		±50'		
11	R	1113 N ROYAL RD	1"		±48'		
12	R	1186 N ROYAL RD	1"		±48'		
13	R	1128 N ROYAL RD	1"		±30'		
14	R	1177 N ROYAL RD	1"		±42'		
TOTAL QUANTITIES OF CU PIPE FOR SERVICE WORK ONLY					±510'		

LEGEND

48 METER NOT LOCATED

49 METER NOT LOCATED

36 SEE SHEET 15 FOR METER LOCATION

NOTES

1. SEE SHEET 5 FOR CONTROL PLAN.
2. SEE TW SD-309 AND SD-310 FOR ALL WATER SERVICE RENEWALS.

Contact Arizona 811 at least two full working days before you begin excavation
ARIZONA811
Call 811 or click Arizona811.com

Kimley»Horn

© 2022 KIMLEY-HORN AND ASSOCIATES, INC.
333 EAST WETMORE ROAD, SUITE 280
TUCSON, ARIZONA 85705 (520) 615-9191

NO.	BY	DATE	REVISION	APPR.	DATE

Registered Professional Engineer (Civil)
CERTIFICATE NO. 38413
RAY MONTOYA
Date Signed 9/8/22
ARIZONA, U.S.A.
Expires 12/31/23

CITY OF NOGALES
WATER MAIN REPLACEMENT
ROYAL ROAD

ROYAL ROAD
STA 35+50 TO STA 45+50

DESIGNED BY: ROM/GAG	DATE 07/22	SURVEY REQUEST NO.	14 OF 33
DRAWN BY: KMT/DIM	DATE 07/22	SCALE: VERT.: NO SCALE HORIZ.: 1"=40'	PLAN NO.
CHECKED BY: ROM/RPM	DATE 08/22		

Plotted By:Karli.Timlin Date:October 13, 2022 File Path:K:\TUC_WaterResources\098036008_City Of Nogales\CADD\Water Plans Royal Road\3.201\3.201Royal Road Wtr Plans Royal Road.dwg

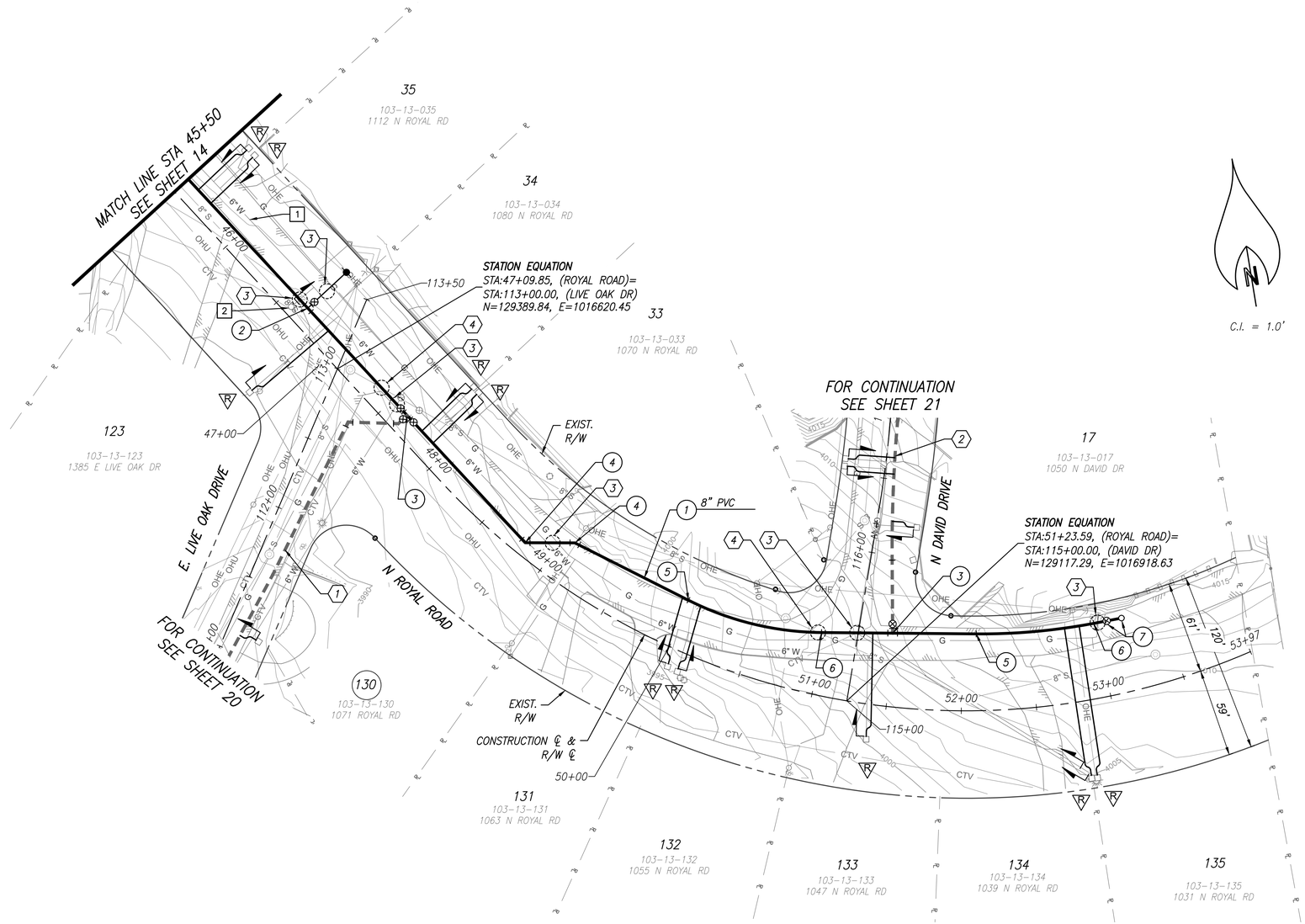

REMOVE/ ABANDON NOTES

1	STA:45+50, OFF:24'LT TO STA:51+34, OFF:32'LT ABANDON EXIST 6" WATER IN PLACE	±558 LF
2	STA:46+59, OFF:5'LT REMOVE & SALVAGE EXIST. FIRE HYDRANT	1 EA

CONSTRUCTION NOTES

1	STA:45+50, OFF:12'LT TO STA:53+19, OFF:49'LT 8" PVC DR14 (CL305) PIPE PER TW SD-115 & SD-650	±769 LF
2	STA:46+67, OFF:13'LT FIRE HYDRANT ASSEMBLY PER TW SD-500	1 EA
	8" X 6" TEE PER TW SD-600	1 EA (NPI)
	6" GATE VALVE, B&C TW SD-300	1 EA
	6" DI (CL350) PIPE PER TW SD-115 & SD-650	±35 LF
3	STA:47+64, OFF:13'LT, STA:51+49, OFF:49'LT 8" X 8" TEE PER TW SD-600	2 EA (NPI)
	8" GATE VALVE, B&C PER TW SD-300	4 EA
4	STA:48+81, OFF:8'LT, STA:49+08, OFF:28'LT 8" 45° BEND PER TW SD-600	2 EA (NPI)
5	STA:49+99, OFF:33'LT, STA:52+11, OFF:51'LT BEGIN CURVE, ANGLE PT	
6	STA:50+97, OFF:41'LT, STA:52+99, OFF:50'LT END CURVE, ANGLE PT	
7	STA:53+08, OFF:49'LT (LOCATION OF VALVE) 8" GATE VALVE, B&C PER TW SD-300	1 EA
	STA:53+19, OFF:49'LT (LOCATION OF DVA) 2" DVA PER TW SD-400	1 EA

REFERENCE NOTES

1. SEE SHEET 20 FOR LATERAL WATER MAIN.
2. SEE SHEET 21 FOR LATERAL WATER MAIN.
3. UTILITY CROSSING, SEE "NEW MAIN LOWERING" DETAIL ON SHEET 29
4. SEE SHEET 27 FOR SEWER CROSSING PROFILES

SERVICE WORK

CODE		ADDRESS / METER NUMBER & SIZE		PIPE SIZES & QUANT. (IN FEET ±) ¾"	1"	1 ½"	2"
1	R	1112 N ROYAL RD	1"		±41'		
2	R	1385 E LIVE OAK DR	1"		±64'		
3	R	1080 N ROYAL RD M03406	1"		±43		
4	R	1070 N ROYAL RD	1"		±43'		
5	R	1063 N ROYAL RD	1"		±44'		
6	R	1055 N ROYAL RD	1"		±44'		
7	R	1047 N ROYAL RD	1"		±69'		
8	R	1039 N ROYAL RD	1"		±99		

SERVICE WORK

CODE		ADDRESS / METER NUMBER & SIZE		PIPE SIZES & QUANT. (IN FEET ±) ¾"	1"	1 ½"	2"
9	R	1031 N ROYAL RD	1"		±100'		
10	R	1071 N ROYAL RD	1"		±48'		
TOTAL QUANTITIES OF CU PIPE FOR SERVICE WORK ONLY					±595'		

LEGEND

(130) METER NOT LOCATED

NOTES

1. SEE SHEET 6 FOR CONTROL PLAN.
2. SEE TW SD-309 AND SD-310 FOR ALL WATER SERVICE RENEWALS.

Contact Arizona 811 at least two full working days before you begin excavation
ARIZONA811
Call 811 or click Arizona811.com

Kimley»Horn
© 2022 KIMLEY-HORN AND ASSOCIATES, INC.
333 EAST WETMORE ROAD, SUITE 280
TUCSON, ARIZONA 85705 (520) 615-9191

NO.	BY	DATE	REVISION	APPR.	DATE

Registered Professional Engineer (Civil)
CERTIFICATE NO. 38413
RAY MONTOYA
Date Signed 08/22/22
ARIZONA, U.S.A.
Expires 12/31/23

CITY OF NOGALES
WATER MAIN REPLACEMENT
ROYAL ROAD

ROYAL ROAD
STA 45+50 TO STA 53+97

DESIGNED BY: ROM/GAG	DATE 07/22	SURVEY REQUEST NO.	15 OF 33
DRAWN BY: KMT/DIM	DATE 07/22	SCALE: VERT.: NO SCALE HORIZ.: 1"=40'	PLAN NO.
CHECKED BY: ROM/RPM	DATE 08/22		

Plotted By:Karti.timlin Date:October 13, 2022 File Path:K:\TUC_WaterResources\098036008_City Of Nogales\CADD\Water Plans Royal Road\3.201\3.201Royal Road Wtr Plans Royal_2.dwg

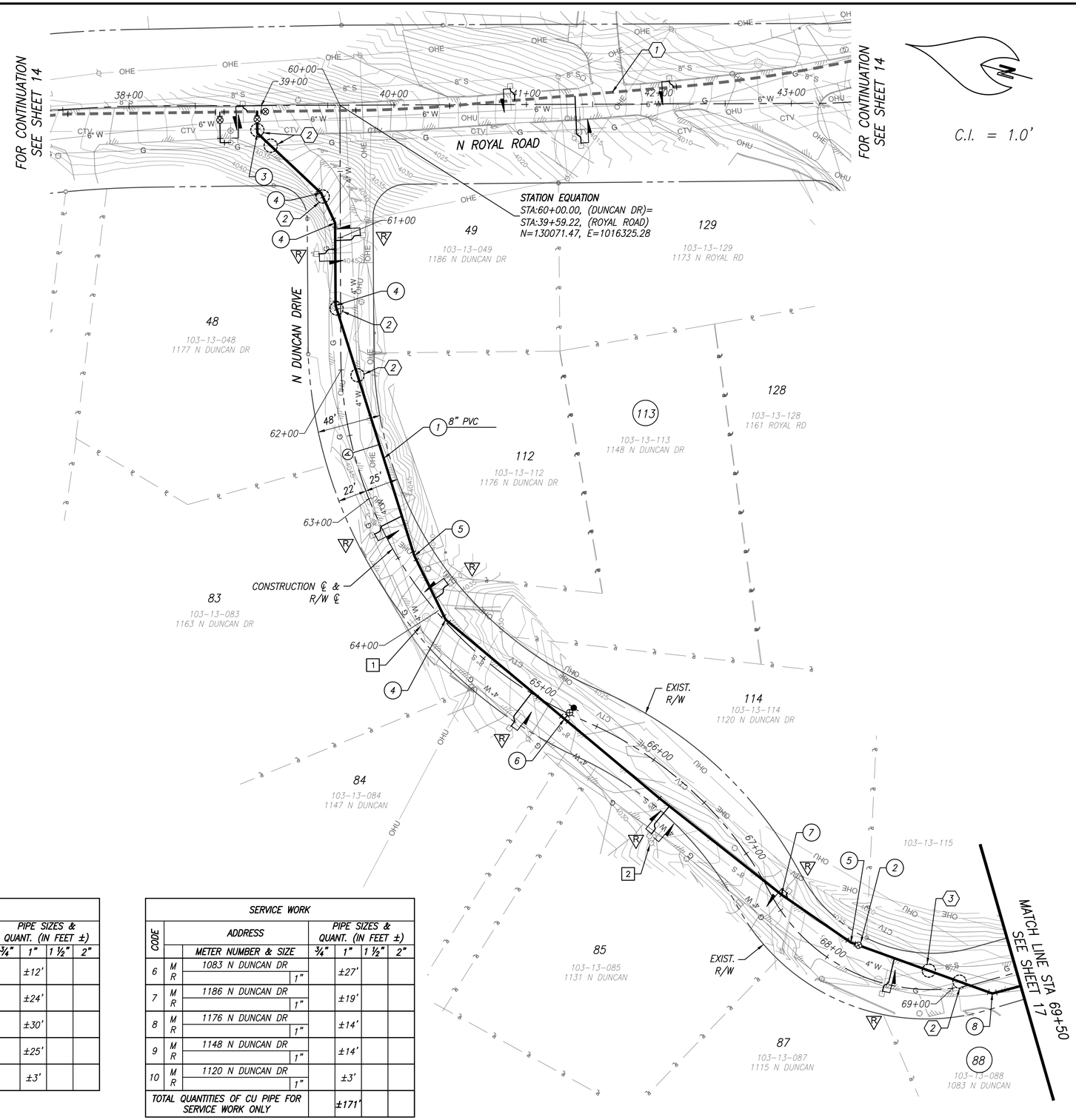

C.I. = 1.0'

LEGEND

(113) METER NOT LOCATED

(88) METER NOT LOCATED

REMOVE/ ABANDON NOTES

1	STA:60+09, OFF:4'LT TO STA:69+50, OFF:2'RT ABANDON EXIST 4" WATER IN PLACE	±941 LF
2	STA:66+42, OFF:50'RT REMOVE & SALVAGE EXIST. FIRE HYDRANT	1 EA

CONSTRUCTION NOTES

1	STA:60+05, OFF:63'RT TO STA:69+50, OFF:11'RT 8" PVC DR14 (CL305) PIPE PER TW SD-115 & SD-650	±945 LF
2	STA:68+12, OFF:20'LT 8" GATE VALVE PER TW SD-300	1 EA
3	STA:60+21, OFF:62'RT 8" 45° BEND PER TW SD-600	1 EA (NPI)
4	STA:60+66, OFF:14'RT, STA:60+89, OFF:4'RT, STA:61+51, OFF:4'RT, STA:64+09, OFF:1'LT 8" 22.5° BEND PER TW SD-600	4 EA (NPI)
5	STA:63+55, OFF:11'LT, STA:68+10, OFF:19'LT 8" 11.25° BEND PER TW SD-600	2 EA (NPI)
6	STA:65+26, OFF:5'RT FIRE HYDRANT ASSEMBLY TW SD-500 8" X 6" TEE TW SD-600 6" GATE VALVE TW SD-300 6" DI (CL350) PIPE PER TW SD-115 & SD-650	1 EA 1 EA (NPI) 1 EA ± 11 LF
7	STA:67+40, OFF:7'LT ANGLE PT	
8	STA:69+28, OFF:10'RT 8" 22.5° BEND PER TW SD-600 8" 11.25° BEND TW SD-600	1 EA (NPI) 1 EA (NPI)

REFERENCE NOTES

1. SEE SHEET 14 FOR LATERAL WATER MAIN PLAN
2. UTILITY CROSSING, SEE "NEW MAIN LOWERING" DETAIL ON SHEET 29
3. SEE SHEET 27 FOR SEWER CROSSING

NOTES

1. SEE SHEET 6 FOR CONTROL PLAN.
2. SEE TW SD-309 AND SD-310 FOR ALL WATER SERVICE RENEWALS.

SERVICE WORK

CODE		ADDRESS / METER NUMBER & SIZE		PIPE SIZES & QUANT. (IN FEET ±) ¾"	1"	1 ½"	2"
1	M	1177 N DUNCAN DR			±12'		
	R		1"				
2	M	1163 N DUNCAN DR			±24'		
	R		1"				
3	M	1147 N DUNCAN DR			±30'		
	R		1"				
4	M	1131 N DUNCAN DR			±25'		
	R		1"				
5	M	1115 N DUNCAN DR			±3'		
	R		1"				

SERVICE WORK

CODE		ADDRESS / METER NUMBER & SIZE		PIPE SIZES & QUANT. (IN FEET ±) ¾"	1"	1 ½"	2"
6	M	1083 N DUNCAN DR			±27'		
	R		1"				
7	M	1186 N DUNCAN DR			±19'		
	R		1"				
8	M	1176 N DUNCAN DR			±14'		
	R		1"				
9	M	1148 N DUNCAN DR			±14'		
	R		1"				
10	M	1120 N DUNCAN DR			±3'		
	R		1"				
TOTAL QUANTITIES OF CU PIPE FOR SERVICE WORK ONLY					±171'		

Contact Arizona 811 at least two full working days before you begin excavation
ARIZONA811
Call 811 or click Arizona811.com

Kimley»Horn

© 2022 KIMLEY-HORN AND ASSOCIATES, INC.
333 EAST WETMORE ROAD, SUITE 280
TUCSON, ARIZONA 85705 (520) 615-9191

NO.	BY	DATE	REVISION	APPR.	DATE

Registered Professional Engineer (Civil) CERTIFICATE NO. 38413 RAY MONTOYA Date Signed 08/22/22 ARIZONA, U.S.A.
Expires 12/31/23

CITY OF NOGALES
WATER MAIN REPLACEMENT
ROYAL ROAD

DUNCAN ROAD
STA 60+09 TO STA 69+50

DESIGNED BY: ROM/GAG	DATE 07/22	SURVEY REQUEST NO.	16 OF 33
DRAWN BY: KMT/DIM	DATE 07/22	SCALE: VERT.: NO SCALE HORIZ.: 1"=40'	PLAN NO.
CHECKED BY: ROM/RPM	DATE 08/22		

Plotted By:Karli.timlin Date:October 13, 2022 File Path:K:\TUC_WaterResources\098036008_City Of Nogales\CADD\Water Plans Royal Road.3.201\3.201Royal Road Wtr Plans Duncan Rd.dwg

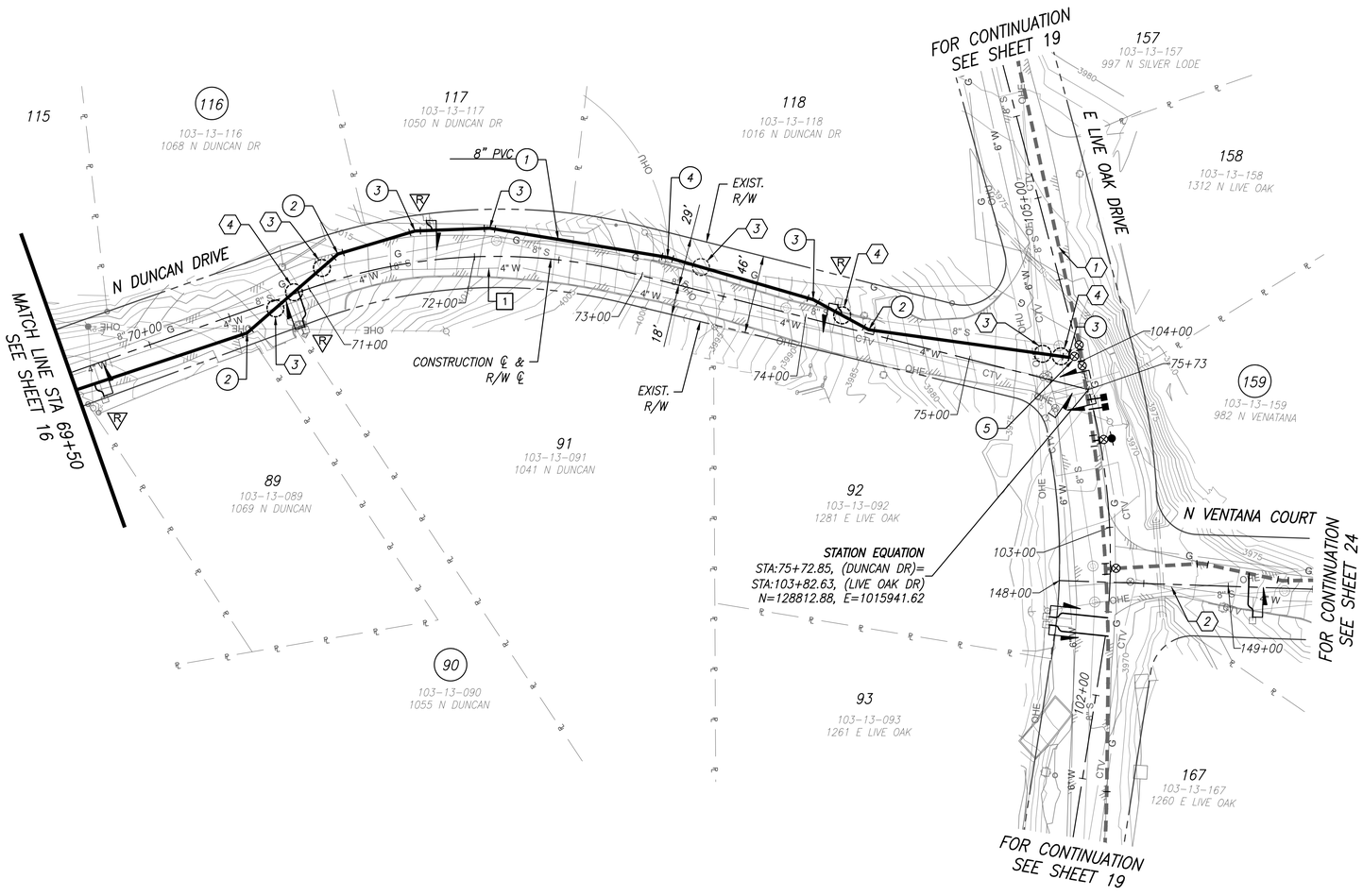

REMOVE/ ABANDON NOTES

1	STA:69+50, OFF:2'RT TO STA:75+48, OFF:1'LT ABANDON EXIST 4" WATER IN PLACE	±598 LF

CONSTRUCTION NOTES

1	STA:69+50, OFF:11'RT TO STA:75+63, OFF:19'LT 8" PVC DR14 (CL305) PIPE PER TW SD-115 & SD-650	±613 LF
2	STA:70+57, OFF:13'RT, STA:71+22, OFF:14'LT, STA:74+38, OFF:2'LT 8" 22.5° BEND PER TW SD-600	3 EA (NPI)
3	STA:71+67, OFF:18'LT, STA:72+09, OFF:17'LT, STA:74+02, OFF:11'LT, STA:75+57, OFF:16'LT 8" 11.25° BEND PER TW SD-600	4 EA (NPI)
4	STA:73+12, OFF:14'LT ANGLE PT	
5	STA:75+60, OFF:17'LT 8" GATE VALE, B&C PER TW SD-600	1 EA

REFERENCE NOTES

6. SEE SHEET 19 FOR LATERAL WATER MAIN
2. SEE SHEET 24 FOR LATERAL WATER MAIN
3. UTILITY CROSSING, SEE "NEW MAIN LOWERING" DETAIL ON SHEET 29
4. SEE SHEETS 27 & 28 FOR SEWER CROSSING

LEGEND

159 METER NOT LOCATED

90 METER NOT LOCATED

SERVICE WORK						
CODE	ADDRESS		PIPE SIZES & QUANT. (IN FEET ±)			
		METER NUMBER & SIZE	¾"	1"	1 ½"	2"
1	R	1068 N DUNCAN DR 1"		±20'		
2	R	1050 N DUNCAN DR 1"		±6'		
3	R	1016 N DUNCAN DR 1"		±4'		
4	R	1041 N DUNCAN DR 1"		±20'		
5	R	1055 N DUNCAN DR 1"		±17'		
6	R	1069 N DUNCAN DR 1"		±9'		
TOTAL QUANTITIES OF CU PIPE FOR SERVICE WORK ONLY				±76'		

NOTES

1. SEE SHEET 6 FOR CONTROL PLAN.
2. SEE TW SD-309 AND SD-310 FOR ALL WATER SERVICE RENEWALS.

Contact Arizona 811 at least two full working days before you begin excavation
ARIZONA811
Call 811 or click Arizona811.com

Kimley»Horn

© 2022 KIMLEY-HORN AND ASSOCIATES, INC.
333 EAST WETMORE ROAD, SUITE 280
TUCSON, ARIZONA 85705 (520) 615-9191

NO.	BY	DATE	REVISION	APPR.	DATE

Registered Professional Engineer (Civil)
CERTIFICATE NO. 38413
RAY MONTOYA
Date Signed 08/22/22
ARIZONA, U.S.A.
Expires 12/31/23

CITY OF NOGALES
WATER MAIN REPLACEMENT
ROYAL ROAD

DUNCAN ROAD
STA 69+50 TO STA 75+63

DESIGNED BY: ROM/GAG	DATE 07/22	SURVEY REQUEST NO.	17 OF 33
DRAWN BY: KMT/DIM	DATE 07/22	SCALE: VERT.: NO SCALE HORIZ.: 1"=40'	PLAN NO.
CHECKED BY: ROM/RPM	DATE 08/22		

Plotted By:Karli.timlin Date:October 13, 2022 File Path:K:\TUC_WaterResources\098036008_City Of Nogales\CADD\Water Plans Royal Road.3.201\3.201Royal Road Wtr Plans Duncan Rd.dwg

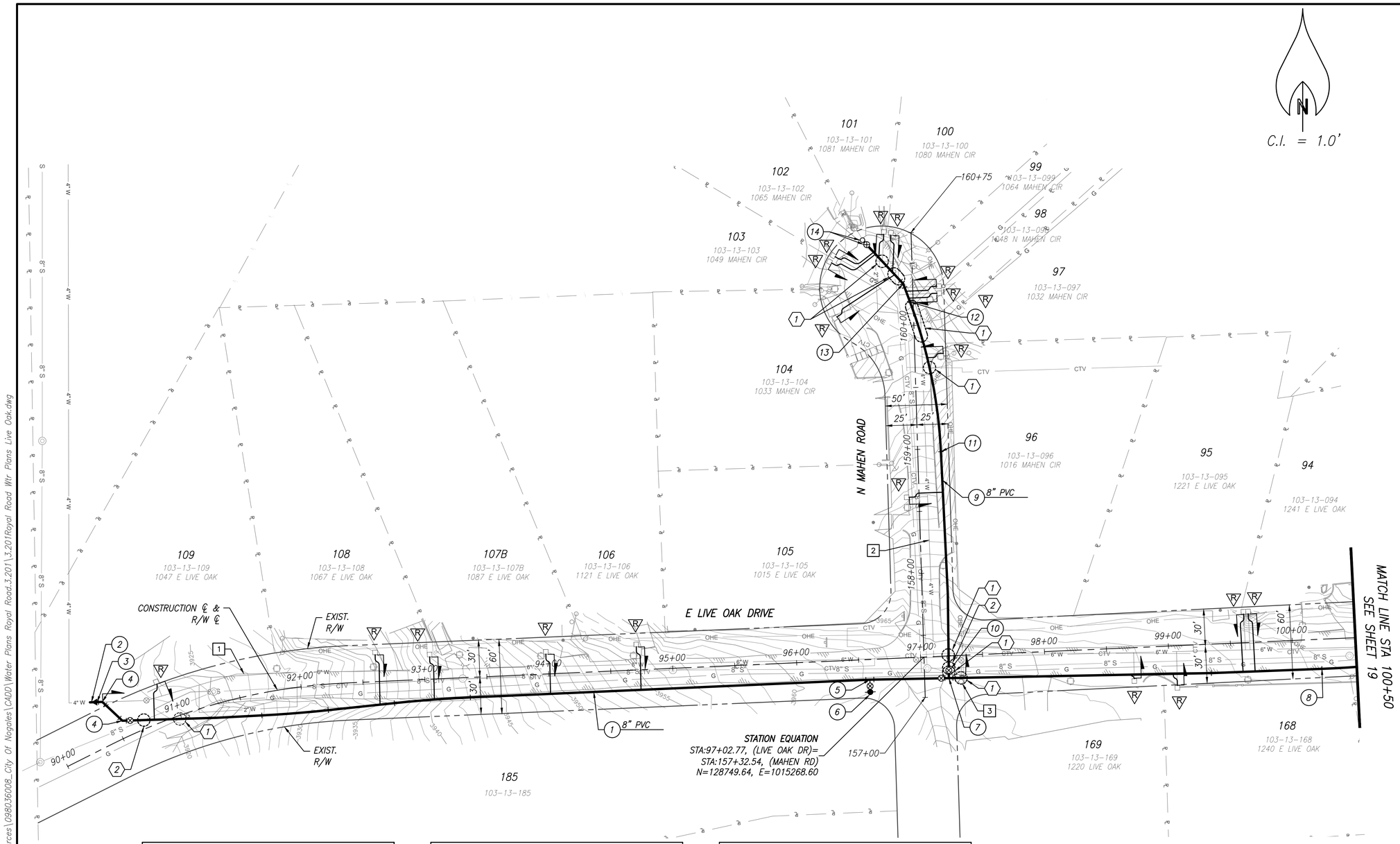

REMOVE/ ABANDON NOTES

1	STA:90+39, OFF:38'LT TO STA:100+50, OFF:7'RT ABANDON EXIST 6" WATER IN PLACE	±1011 LF
2	STA:157+32, OFF:8'RT TO STA:160+51, OFF:11'LT ABANDON EXIST 4" WATER IN PLACE	±319 LF
3	STA:97+32, OFF:21'RT REMOVE & SALVAGE EXIST. FIRE HYDRANT	1 EA

CONSTRUCTION NOTES

1	STA:90+39, OFF:38'LT TO STA:100+50, OFF:24'RT 8" PVC DR14 (CL305) PIPE PER TW SD-115 & SD-650	±1011 LF
2	STA:90+39, OFF:38'LT 4" CONNECTION	1 EA
3	STA:90+40, OFF:38'LT 8" x 4" ECCENTRIC REDUCER	1 EA
4	STA:90+48, OFF:34'LT, STA:90+55, OFF:13'LT 8" 45° BEND PER TW SD-600	2 EA (NPI)
5	STA:96+58, OFF:16'RT 8" X 6" TEE PER TW SD-600	1 EA (NPI)
6	STA:96+58, OFF:26'RT FIRE HYDRANT ASSEMBLY PER TW SD-500 6" GATE VALVE, B&C PER TW SD-300 6" DI (CL350) PIPE PER TW SD-115 & SD-650	1 EA 1 EA ±10 LF
7	STA:97+22, OFF:18'RT 8" X 8" TEE PER TW SD-600	1 EA (NPI)
8	STA:100+23, OFF:24'RT BEGIN CURVE, ANGLE PT	
9	STA:157+15, OFF:20'RT TO STA:160+66, OFF:36'LT 8" PVC DR14 (CL305) PIPE TW SD-115 & SD-650	±351 LF
10	STA:157+21, OFF:20'RT 8" GATE VALVE, B&C PER TW SD-300	1 EA
11	STA:158+98, OFF:19'RT BEGIN CURVE, ANGLE PT	
12	STA:160+19, OFF:3'LT END CURVE, ANGLE PT	
13	STA:160+34, OFF:8'LT 8" 22.5° BEND PER TW SD-600	1 EA (NPI)
14	STA:160+66, OFF:36'LT (LOCATION OF VALVE) 8" GATE VALVE, B&C PER TW SD-300 STA:160+70, OFF:39'LT (LOCATION OF DVA) 2" DVA PER TW SD-400	1 EA 1 EA

REFERENCE NOTES

1. UTILITY CROSSING, SEE "NEW MAIN LOWERING" DETAIL ON SHEET 29
2. SEE SHEET 28 FOR SEWER CROSSING.

NOTES

1. SEE SHEET 7 & 10 FOR CONTROL PLAN.
2. SEE TW SD-309 AND SD-310 FOR ALL WATER SERVICE RENEWALS.

SERVICE WORK

CODE		ADDRESS / METER NUMBER & SIZE		PIPE SIZES & QUANT. (IN FEET ±) ¾"	1"	1 ½"	2"
1	R	1047 E LIVE OAK DR	1"		±29'		
2	R	1067 E LIVE OAK DR	1"		±40'		
3	R	1087 E LIVE OAK DR	1"		±35'		
4	R	1121 E LIVE OAK DR	1"		±32'		
5	R	1015 E LIVE OAK DR	1"		±35'		
6	R	1033 N MAHEN RD	1"		±57'		
7	R	1049 N MAHEN RD	1"		±36'		
8	R	1065 N MAHEN RD	1"		±31'		

SERVICE WORK

CODE		ADDRESS / METER NUMBER & SIZE		PIPE SIZES & QUANT. (IN FEET ±) ¾"	1"	1 ½"	2"
9	R	1081 N MAHEN RD	1"		±19'		
10	R	1080 N MAHEN RD	1"		±30'		
11	R	1064 N MAHEN RD	1"		±25'		
12	R	1048 N MAHEN RD	1"		±23'		
13	R	1032 N MAHEN RD	1"		±14'		
14	R	1016 N MAHEN RD	1"		±27'		
15	R	1221 E LIVE OAK	1"		±47'		
16	R	1241 E LIVE OAK	1"		±47'		

SERVICE WORK

CODE		ADDRESS / METER NUMBER & SIZE		PIPE SIZES & QUANT. (IN FEET ±) ¾"	1"	1 ½"	2"
17	R	1220 E LIVE OAK	1"		±3'		
18	R	1240 E LIVE OAK	1"		±10'		
TOTAL QUANTITIES OF CU PIPE FOR SERVICE WORK ONLY					±540'		

NO.	BY	DATE	REVISION	APPR.	DATE

Kimley»Horn

© 2022 KIMLEY-HORN AND ASSOCIATES, INC.
333 EAST WETMORE ROAD, SUITE 280
TUCSON, ARIZONA 85705 (520) 615-9191

Registered Professional Engineer (Civil) 38413 RAY MONTOYA Date Signed 08/22/22 ARIZONA, U.S.A.
Expires 12/31/23

CITY OF NOGALES
WATER MAIN REPLACEMENT
ROYAL ROAD

LIVE OAK DRIVE STA 90+00 TO STA 100+50
MAHEN ROAD STA 157+00 TO STA 160+01

DESIGNED BY: ROM/GAG	DATE 07/22	SURVEY REQUEST NO.	18 OF 33
DRAWN BY: KMT/DIM	DATE 07/22	SCALE: VERT.: NO SCALE HORIZ.: 1"=40'	PLAN NO.
CHECKED BY: ROM/RPM	DATE 08/22		

Contact Arizona 811 at least two full working days before you begin excavation
ARIZONA811
Call 811 or click Arizona811.com

Plotted By:Karli.Timlin Date:October 13, 2022 File Path:K:\TUC_WaterResources\098036008_City Of Nogales\CADD\Water Plans Royal Road.3.2011\3.2011Royal Road Wtr Plans Live Oak.dwg

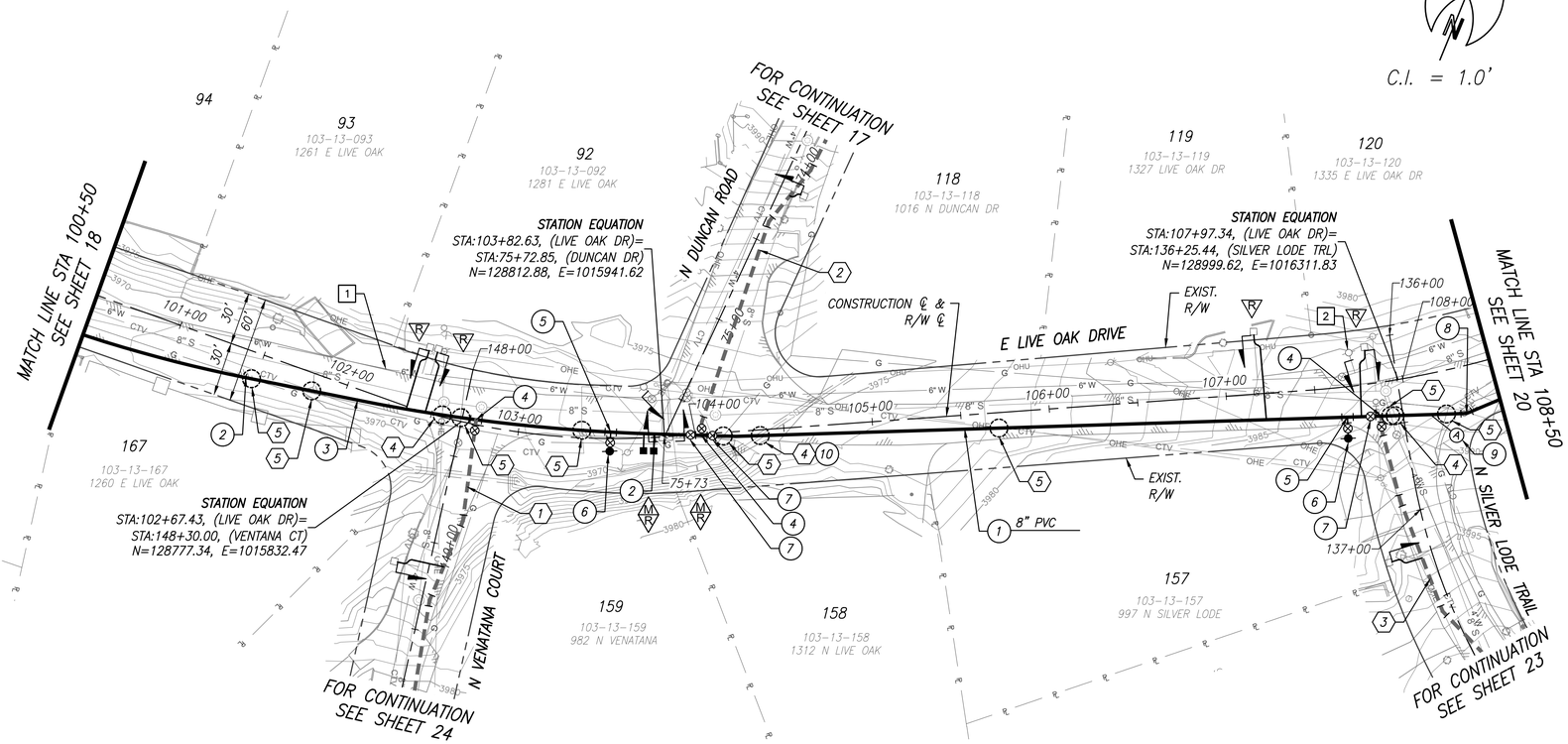

REMOVE/ ABANDON NOTES

1. STA:100+50, OFF:7'RT TO STA:108+50, OFF:15'LT
   ABANDON EXIST 6" WATER IN PLACE — ±800 LF
2. STA:103+72, OFF:29'LT TO STA:107+72, OFF:19'LT
   REMOVE & SALVAGE EXIST. FIRE HYDRANT — 2 EA

CONSTRUCTION NOTES

1. STA:100+50, OFF:24'RT TO STA:108+50, OFF:23'RT
   8" PVC DR14 (CL305) PIPE PER TW SD-115 & SD-650 — ±785 LF
2. STA:101+45, OFF:15'RT, STA:103+77, OFF:2'LT
   END CURVE, ANGLE PT
3. STA:102+08, OFF:6'RT
   BEGIN CURVE, ANGLE PT
4. STA:102+75, OFF:3'LT, STA:104+03, OFF:1'RT
   STA:107+85, OFF:19'RT
   8" X 8" TEE PER TW SD-600 — 3 EA (NPI)
5. STA:103+52, OFF:4'LT, STA:107+67, OFF:17'RT
   8" X 6" TEE TW SD-600 — 2 EA (NPI)
6. STA:103+52, OFF:7'RT, STA:107+66, OFF:29'RT
   FIRE HYDRANT ASSEMBLY PER TW SD-500 — 2 EA
   6" GATE VALVE, B&C TW SD-300 — 2 EA
   6" DI (CL350) PIPE TW SD-115 & SD-650 — ±23 LF
7. STA:103+97, OFF:0'T, STA:104+10, OFF:1'RT,
   STA:107+79, OFF:18'RT,
   8" GATE VALVE, B&C TW SD-300 — 5 EA
8. STA:108+31, OFF:26'RT
   8" 22.5° BEND TW SD-600 — 1 EA (NPI)
9. STA:108+11, OFF:23'RT (LOCATION OF ARV)
   1" COMBINATION ARV PER TW SD-331 — 1 EA
   STA:108+23, OFF:37'RT (LOCATION OF SADDLE)
   1" CU PIPE — ±20 LF
10. 8" DI (CL305) PIPE PER "SEWER CROSSING"
    DETAIL ON SHEET 29
    SEE SHEET 28 FOR SEWER CROSSING. — ±15 LF

REFERENCE NOTES

1. SEE SHEET 24 FOR LATERAL WATER MAIN.
2. SEE SHEET 17 FOR LATERAL WATER MAIN.
3. SEE SHEET 23 FOR LATERAL WATER MAIN.
4. SEE SHEET 28 FOR STORM AND SEWER CROSSINGS, PROTECT IN PLACE
5. UTILITY CROSSING, SEE "NEW MAIN LOWERING" DETAIL ON SHEET 29

SERVICE WORK

CODE		ADDRESS / METER NUMBER & SIZE	PIPE SIZES & QUANT. (IN FEET ±) ¾"	1"	1 ½"	2"
1	R	1260 E LIVE OAK RD — 1"		±26'		
2	M R	982 N VENATANA — STA:103+70, OFF:7'RT — 1"		±16'		
3	M R	1312 E LIVE OAK RD — STA:103+76, OFF:8'RT — 1"		±18'		
4	R	997 N SILVER LODE — 1"		±17'		
5	R	1327 E LIVE OAK RD — 1"		±48'		
6	R	1261 E LIVE OAK RD — 1"		±35'		
7	R	1281 E LIVE OAK RD — 1"		±35'		
8	R	1335 E LIVE OAK RD — 1"		±37'		
TOTAL QUANTITIES OF CU PIPE FOR SERVICE WORK ONLY				±232'		

NOTES

1. SEE SHEET 7 FOR CONTROL PLAN.
2. SEE TW SD-309 AND SD-310 FOR ALL WATER SERVICE RENEWALS.

Contact Arizona 811 at least two full working days before you begin excavation
ARIZONA811
Call 811 or click Arizona811.com

Kimley»Horn
© 2022 KIMLEY-HORN AND ASSOCIATES, INC.
333 EAST WETMORE ROAD, SUITE 280
TUCSON, ARIZONA 85705 (520) 615-9191

NO.	BY	DATE	REVISION	APPR.	DATE

Registered Professional Engineer (Civil) CERTIFICATE NO. 38413 RAY MONTOYA Date Signed 08/22/22 ARIZONA, U.S.A.
Expires 12/31/23

CITY OF NOGALES
WATER MAIN REPLACEMENT
ROYAL ROAD

LIVE OAK DRIVE
STA 100+50 TO STA 108+50

DESIGNED BY: ROM/GAG	DATE 07/22	SURVEY REQUEST NO.	19 OF 33
DRAWN BY: KMT/DIM	DATE 07/22	SCALE: VERT.: NO SCALE HORIZ.: 1"=40'	PLAN NO.
CHECKED BY: ROM/RPM	DATE 08/22		

Plotted By:Karli.Timlin Date:October 13, 2022 File Path:K:\TUC_WaterResources\098036008_City Of Nogales\CADD\Water Plans Royal Road\3.201\3.201Royal Road Wtr Plans Live Oak.dwg

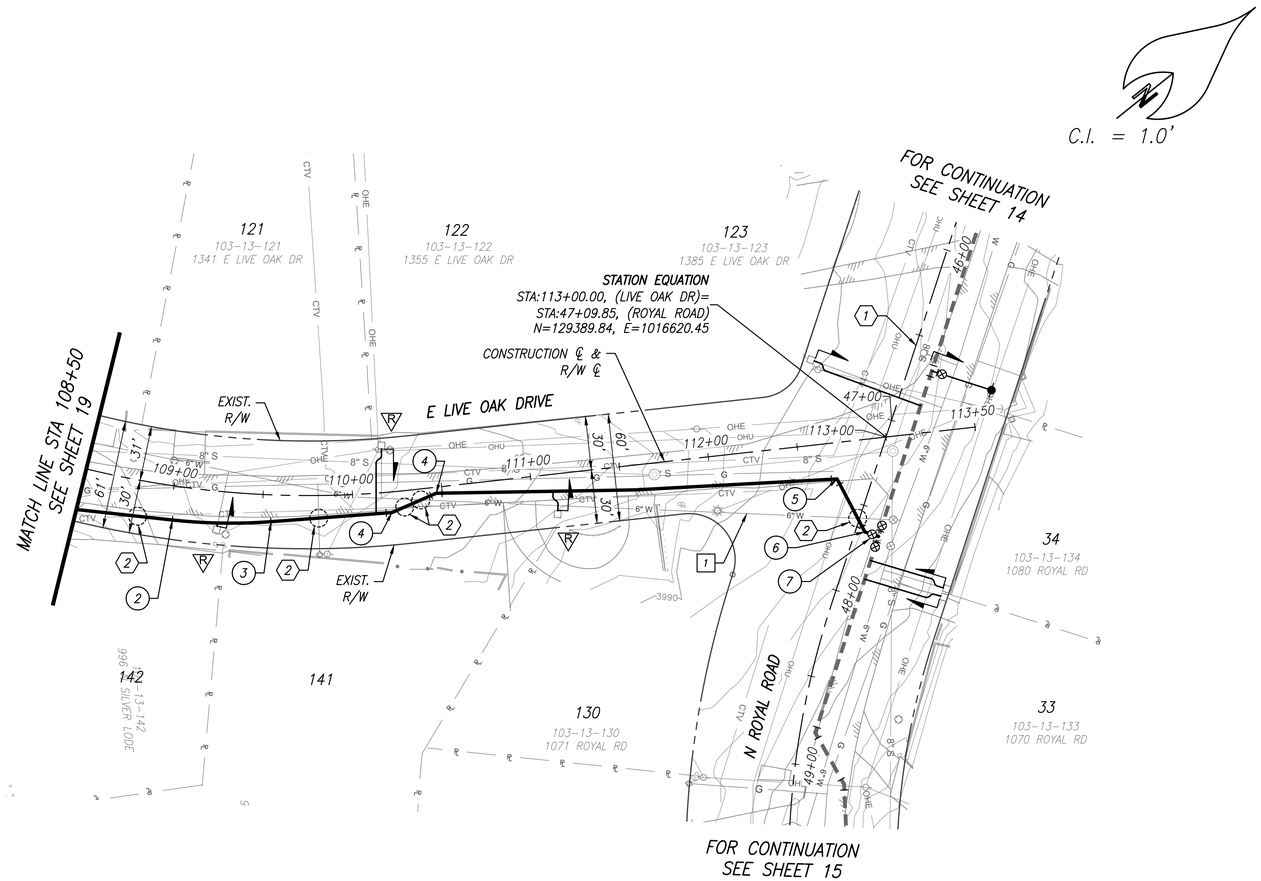

REMOVE/ ABANDON NOTES		
1	STA:108+50, OFF:15'LT TO STA:113+03, OFF:47'RT ABANDON EXIST 6" WATER IN PLACE	±453 LF

CONSTRUCTION NOTES		
1	STA:108+50, OFF:23'RT TO STA:112+90, OFF:55'RT 8" PVC DR14 (CL305) PIPE TW SD-115 & TW SD-650	±440 LF
2	STA:109+02, OFF:19'RT BEGIN CURVE, ANGLE PT	
3	STA:109+55, OFF:15'RT END CURVE, ANGLE PT	
4	STA:110+21, OFF:11'RT, STA:110+47, OFF:3'RT 8" 22.5° BEND TW SD-600	2 EA (NPI)
5	STA:112+70, OFF:20'RT 8" 22.5° BEND TW SD-600 8" 45° BEND TW SD-600	1 EA (NPI) 1 EA (NPI)
6	STA:112+82, OFF:51'RT 8" 45° BEND TW SD-600	1 EA (NPI)
7	8" GATE VALVE, B&C TW SD-300	1 EA

REFERENCE NOTES	
1	SEE SHEET 15 FOR LATERAL WATER MAIN.
2	UTILITY CROSSING, SEE "NEW MAIN LOWERING" DETAIL ON SHEET 29

SERVICE WORK						
CODE		ADDRESS	PIPE SIZES & QUANT. (IN FEET ±)			
		METER NUMBER & SIZE	¾"	1"	1 ½"	2"
1	M	1341 E LIVE OAK RD				
	R	1"		±28'		
2	M	1355 E LIVE OAK RD				
	R	1"		±6'		
3	M	1071 N ROYAL RD				
	R	1"		±6'		
TOTAL QUANTITIES OF CU PIPE FOR SERVICE WORK ONLY				±40'		

NOTES

1. SEE SHEET 7 FOR CONTROL PLAN.
2. SEE TW SD-309 AND SD-310 FOR ALL WATER SERVICE RENEWALS.

Contact Arizona 811 at least two full working days before you begin excavation
ARIZONA811
Call 811 or click Arizona811.com

Kimley»Horn

© 2022 KIMLEY-HORN AND ASSOCIATES, INC.
333 EAST WETMORE ROAD, SUITE 280
TUCSON, ARIZONA 85705 (520) 615-9191

NO.	BY	DATE	REVISION	APPR.	DATE

Registered Professional Engineer (Civil)
CERTIFICATE NO. 38413
RAY MONTOYA
Date Signed 08/22/22
ARIZONA, U.S.A.
Expires 12/31/23

CITY OF NOGALES
WATER MAIN REPLACEMENT
ROYAL ROAD

LIVE OAK DRIVE
STA 108+50 TO STA 113+46

DESIGNED BY: ROM/GAG	DATE: 07/22	SURVEY REQUEST NO.	20 OF 33
DRAWN BY: KMT/DIM	DATE: 07/22	SCALE: VERT.: NO SCALE HORIZ.: 1"=40'	PLAN NO.
CHECKED BY: ROM/RPM	DATE: 08/22		

Plotted By:Karli.Timlin Date:October 13, 2022 File Path:K:\TUC_WaterResources\098036008_City Of Nogales\CADD\Water Plans Royal Road.3.201\3.201Royal Road Wtr Plans Live Oak.dwg

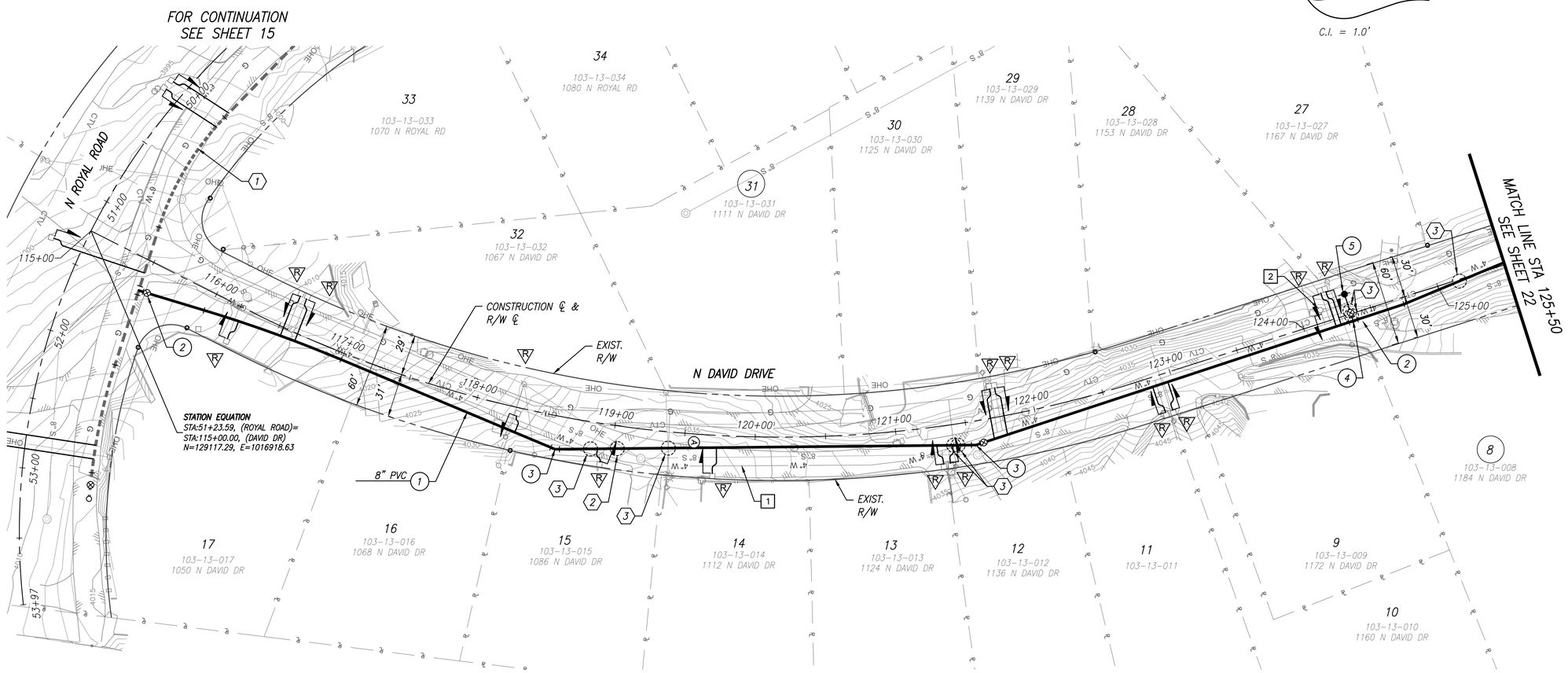

REMOVE/ ABANDON NOTES

1	STA:115+31, OFF:2'RT TO STA:125+50, OFF:7'LT ABANDON EXIST 4" WATER IN PLACE	±1019 LF
2	STA:124+15, OFF:9'LT REMOVE & SALVAGE EXIST. FIRE HYDRANT	1 EA

CONSTRUCTION NOTES

1	STA:115+49, OFF:23'RT TO STA:125+50, OFF:2'LT 8" PVC DR14 (CL 305) PIPE PER TW SD-115 & SD-650	±1001 LF
2	STA:115+55, OFF:21'RT, STA:124+41, OFF:5'RT 8" GATE VALVE, B&C PER TW SD-300	2 EA
3	STA:118+61, OFF:24'RT, STA:121+55, OFF:17'RT 8" 22.5° BEND PER TW SD-600	2 EA (NPI)
4	STA:124+35, OFF:5'RT 8" X 6" TEE PER TW SD-600	1 EA (NPI)
5	STA:124+35, OFF:15'LT FIRE HYDRANT ASSEMBLY PER TW SD-500 6" GATE VALVE, B&C PER TW SD-300 6" DI (CL350) PIPE PER TW SD-115 & SD-650	 1 EA 1 EA ±20 LF

REFERENCE NOTES

1. SEE SHEET 15 FOR LATERAL WATER MAIN.
2. SEE SHEET 28 FOR SEWER CROSSING.
3. UTILITY CROSSING, SEE "NEW MAIN LOWERING" DETAIL ON SHEET 29

SERVICE WORK						
CODE		ADDRESS	PIPE SIZES & QUANT. (IN FEET ±)			
		METER NUMBER & SIZE	¾"	1"	1 ½"	2"
1	R	1050 N DAVID DR 1"		±14'		
2	R	1067 N DAVID DR 1"		±31'		
3	R	1067 N DAVID DR 1"		±31'		
4	R	1068 N DAVID DR 1"		±11'		
5	R	1086 N DAVID DR 1"		±9'		
6	R	1112 N DAVID DR 1"		±18'		
7	R	1124 N DAVID DR 1"		±13'		
8	R	1136 N DAVID DR 1"		±13'		
9	R	1125 N DAVID DR 1"		±35'		

SERVICE WORK						
CODE		ADDRESS	PIPE SIZES & QUANT. (IN FEET ±)			
		METER NUMBER & SIZE	¾"	1"	1 ½"	2"
10	R	1139 N DAVID DR 1"		±34'		
11	R	1160 N DAVID DR 1"		±20'		
12	R	1172 N DAVID DR 1"		±20'		
13	R	1153 N DAVID DR 1"		±26'		
14	R	1167 N DAVID DR 1"		±25'		
15	R	1111 N DAVID DR 1"		±33		
16	R	1184 N DAVID DR 1"		±13		
TOTAL QUANTITIES OF CU PIPE FOR SERVICE WORK ONLY				±346'		

LEGEND

(31) METER NOT LOCATED

(8) METER NOT LOCATED

NOTES

1. SEE SHEET 8 FOR CONTROL PLAN.
2. SEE TW SD-309 AND SD-310 FOR ALL WATER SERVICE RENEWALS.

Kimley»Horn

© 2022 KIMLEY-HORN AND ASSOCIATES, INC.
333 EAST WETMORE ROAD, SUITE 280
TUCSON, ARIZONA 85705 (520) 615-9191

NO.	BY	DATE	REVISION	APPR.	DATE

Registered Professional Engineer (Civil)
CERTIFICATE NO. 38413
RAY MONTOYA
Date Signed 08/22/22
ARIZONA, U.S.A.
Expires 12/31/23

CITY OF NOGALES
WATER MAIN REPLACEMENT
ROYAL ROAD

DAVID DRIVE
STA 113+00 TO STA 125+50

DESIGNED BY: ROM/GAG	DATE: 07/22	SURVEY REQUEST NO.	21 OF 33
DRAWN BY: KMT/DIM	DATE: 07/22	SCALE: VERT.: NO SCALE HORIZ.: 1"=40'	PLAN NO.
CHECKED BY: ROM/RPM	DATE: 08/22		

Contact Arizona 811 at least two full working days before you begin excavation
ARIZONA811
Call 811 or click Arizona811.com

Plotted By:Karli.timlin Date:October 13, 2022 File Path:K:\TUC_WaterResources\098036008_City Of Nogales\CADD\Water Plans Royal Road.3.201\3.201Royal Road Wtr Plans David Dr.dwg

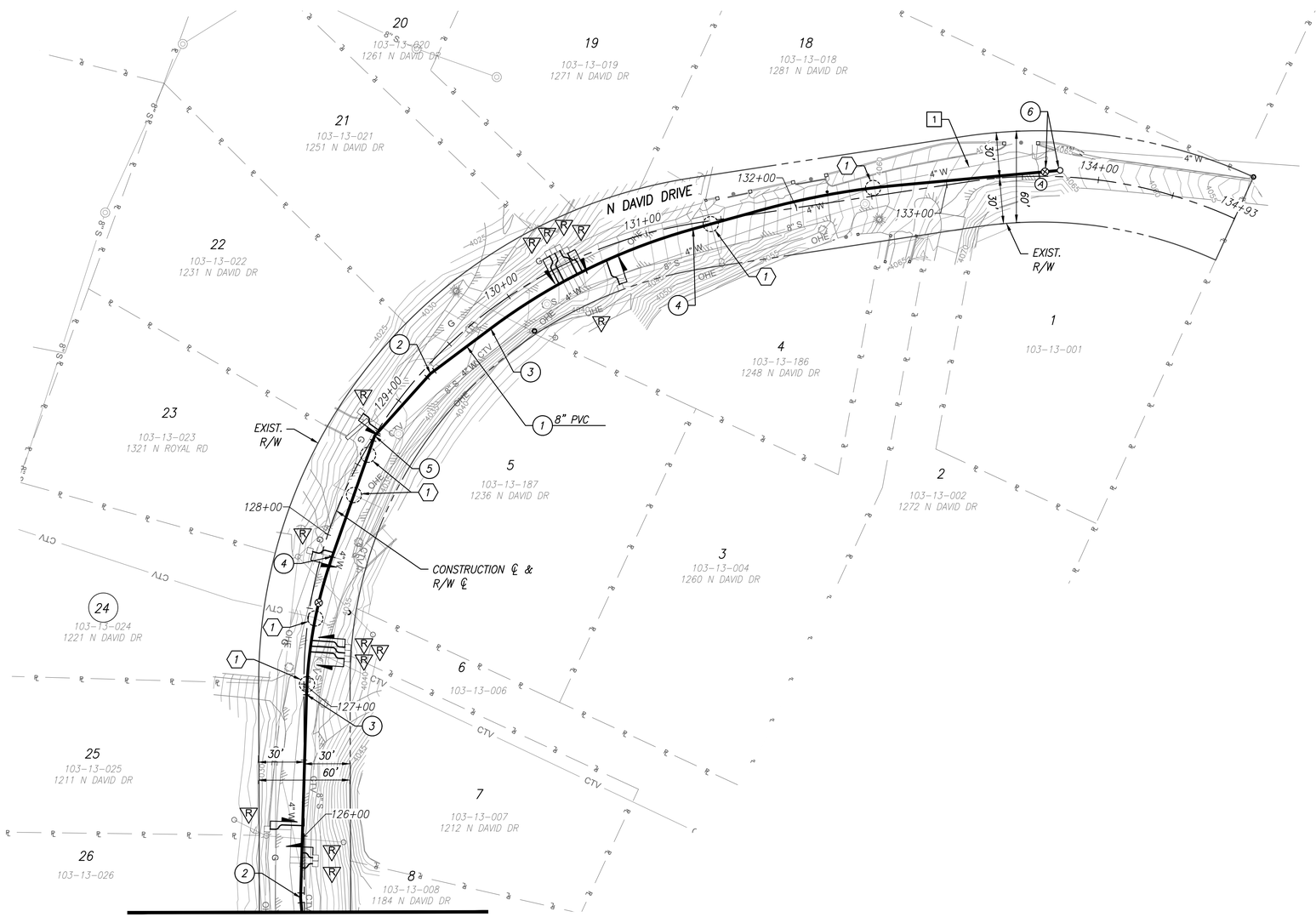

MATCH LINE STA 125+50 SEE SHEET 21

C.I. = 1.0'

REMOVE/ ABANDON NOTES

1	STA:125+50, OFF:7'LT TO STA:134+82, OFF:35'LT ABANDON EXIST 4" WATER IN PLACE PER	±932 LF

CONSTRUCTION NOTES

1	STA:125+49, OFF:1'LT TO STA:133+65, OFF:3'LT 8" PVC DR14 (CL 305) PIPE PER TW SD-115 & SD-650	±816 LF
2	STA:125+59, OFF:2'LT, STA:129+27, OFF:5'RT 8" 11.25° BEND PER TW SD-600	2 EA (NPI)
3	STA:126+93, OFF:2'RT, STA:129+78, OFF:10'RT BEGIN CURVE, ANGLE POINT	
4	STA:127+87, OFF:7'RT, STA:131+31, OFF:4'RT END CURVE, ANGLE POINT	
5	STA:128+72, OFF:0'RT 8" 22.5° BEND PER TW SD-600	1 EA (NPI)
6	STA:133+65, OFF:3'LT (LOCATION OF VALVE) 8" GATE VALVE, B&C PER TW SD-300	1 EA
	STA:133+75, OFF:4'LT (LOCATION OF DVA) 2" DVA PER TW SD-400	1 EA

REFERENCE NOTES

1. UTILITY CROSSING, SEE "NEW MAIN LOWERING" DETAIL ON SHEET 29

SERVICE WORK						
CODE		ADDRESS / METER NUMBER & SIZE	PIPE SIZES & QUANT. (IN FEET ±) ¾"	1"	1 ½"	2"
1	R	1184 N DAVID DR / 1"		±7'		
2	R	1212 N DAVID DR / 1"		±7'		
3	R	1211 N DAVID DR / 1"		±21'		
4	R	1236 N DAVID DR / 1"		±23'		
5	R	1260 N DAVID DR / 1"		±23'		
6	R	1272 N DAVID DR / 1"		±23'		
7	R	1321 N DAVID DR / 1"		±21'		

SERVICE WORK						
CODE		ADDRESS / METER NUMBER & SIZE	PIPE SIZES & QUANT. (IN FEET ±) ¾"	1"	1 ½"	2"
8	R	1231 N DAVID DR / 1"		±15'		
9	R	1251 N DAVID DR / 1"		±19'		
10	R	1261 N DAVID DR / 1"		±19'		
11	R	1271 N DAVID DR / 1"		±15'		
12	R	1281 N DAVID DR / 1"		±15'		
13	R	1248 N DAVID DR / 1"		±18'		
14	R	1221 N DAVID DR / 1"		±18'		
TOTAL QUANTITIES OF CU PIPE FOR SERVICE WORK ONLY				±244		

LEGEND

24 METER NOT LOCATED

NOTES

1. SEE SHEET 8 FOR CONTROL PLAN.
2. SEE TW SD-309 AND SD-310 FOR ALL WATER SERVICE RENEWALS.

Contact Arizona 811 at least two full working days before you begin excavation
ARIZONA811
Call 811 or click Arizona811.com

Kimley»Horn

© 2022 KIMLEY-HORN AND ASSOCIATES, INC.
333 EAST WETMORE ROAD, SUITE 280
TUCSON, ARIZONA 85705 (520) 615-9191

NO.	BY	DATE	REVISION	APPR.	DATE

Registered Professional Engineer (Civil)
CERTIFICATE NO. 38413
RAY MONTOYA
Date Signed 08/22/22
ARIZONA, U.S.A.
Expires 12/31/23

CITY OF NOGALES
WATER MAIN REPLACEMENT
ROYAL ROAD

DAVID DRIVE
STA 125+50 TO STA 132+93

DESIGNED BY: ROM/GAG	DATE: 07/22	SURVEY REQUEST NO.	22 OF 33
DRAWN BY: KMT/DIM	DATE: 07/22	SCALE: VERT.: NO SCALE HORIZ.: 1"=40'	PLAN NO.
CHECKED BY: ROM/RPM	DATE: 08/22		

Plotted By:Karli.timlin Date:October 13, 2022 File Path:K:\TUC_WaterResources\098036008_City Of Nogales\CADD\Water Plans Royal Road.3.201\3.201Royal Road Wtr Plans David Dr.dwg

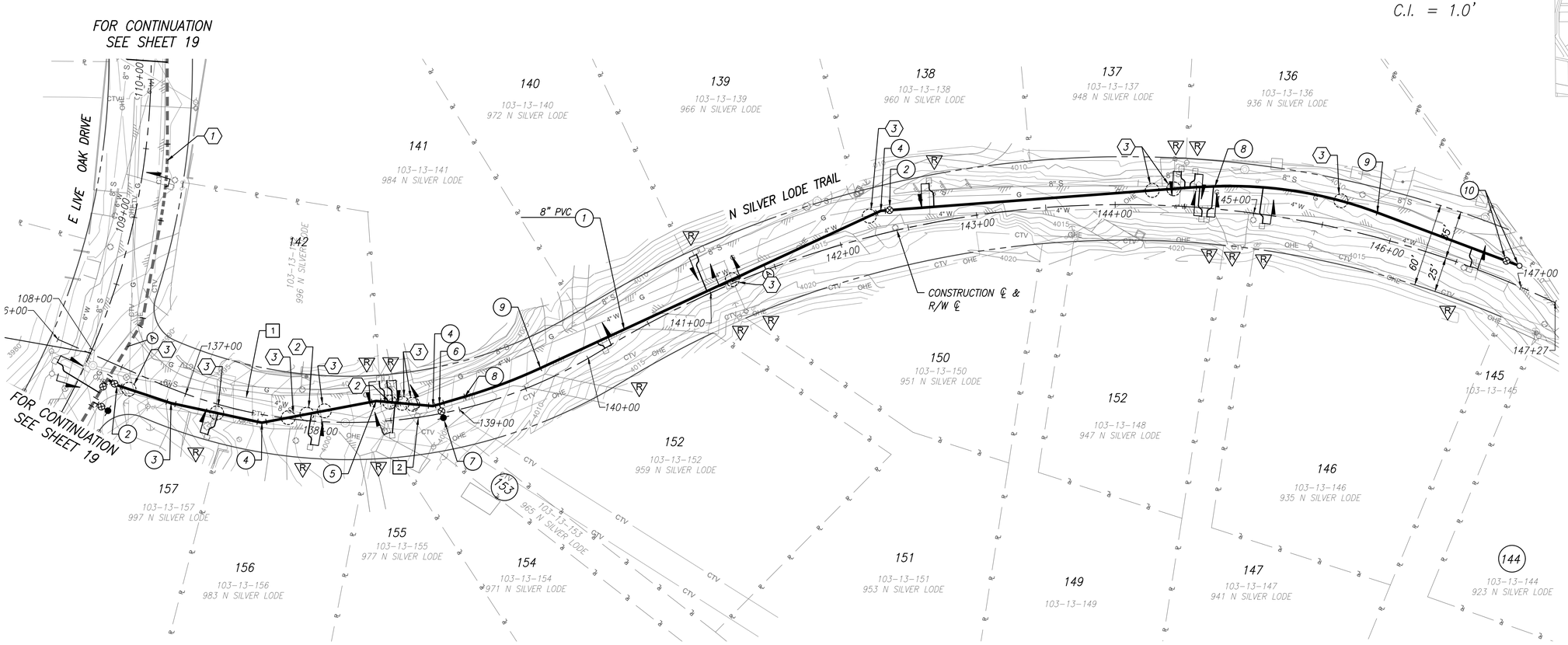

REMOVE/ ABANDON NOTES

1	STA:136+16, OFF:11'RT TO STA:146+85, OFF:5'LT ABANDON EXIST 4" WATER IN PLACE	±1069 LF
1	STA:138+69, OFF:1'LT REMOVE & SALVAGE EXIST. FIRE HYDRANT	1 EA

CONSTRUCTION NOTES

1	STA:136+44, OFF:12'RT TO STA:146+83, OFF:13'LT 8" PVC DR14 (CL305) PIPE PER TW SD-115 & SD-650	±1039 LF
2	STA:136+50, OFF:13'RT, STA:142+40, OFF:15'LT 8" GATE VALVE, B&C PER TW SD-300	2 EA
3	STA:136+93, OFF:10'RT ANGLE PT	
4	STA:137+58, OFF:6'RT, STA:138+82, OFF:6'LT, STA:142+34, OFF:16'LT 8" 22.5° BEND PER TW SD-600	3 EA (NPI)
5	STA:138+40, OFF:15'LT 8" 11.25° BEND PER TW SD-600	1 EA (NPI)
6	STA:138+87, OFF:7'LT 8" X 6" TEE PER TW SD-600	1 EA (NPI)
7	STA:138+88, OFF:3'RT FIRE HYDRANT ASSEMBLY PER TW SD-500 6" GATE VALVE, B&C PER TW SD-300 6" DI (CL350) PIPE PER TW SD-115 & SD-650	1 EA 1 EA ±10 LF
8	STA:139+06, OFF:8'LT, STA:144+70, OFF:16'LT BEGIN CURVE, ANGLE PT	
9	STA:139+66, OFF:9'LT, STA:145+86, OFF:17'LT END CURVE, ANGLE PT	
10	STA:146+83, OFF:13'LT (LOCATION OF VALVE) 8" GATE VALVE, B&C PER TW SD-300 STA:146+93, OFF:14'LT (LOCATION OF DVA) 2" DVA PER TW SD-400	1 EA 1 EA

REFERENCE NOTES

1. SEE SHEET 19 FOR LATERAL WATER MAIN.
2. SEE SHEET 28 FOR SEWER CROSSING.
3. UTILITY CROSSING, SEE "NEW MAIN LOWERING DETAIL ON SHEET 29.

SERVICE WORK						
CODE	ADDRESS		PIPE SIZES & QUANT. (IN FEET ±)			
		METER NUMBER & SIZE	¾"	1"	1 ½"	2"
1	R	997 N SILVER LODE TR 1"		±17'		
2	R	983 N SILVER LODE TR 1"		±22'		
3	R	977 N SILVER LODE TR 1"		±17'		
4	R	996 N SILVER LODE TR 1"		±14'		
5	R	959 N SILVER LODE TR 1"		±6		
6	R	953 N SILVER LODE TR 1"		±1'		
7	R	960 N SILVER LODE TR 1"		±17'		
8	R	948 N SILVER LODE TR 1"		±12'		
9	R	923 N SILVER LODE TR 1"		±56'		

SERVICE WORK						
CODE	ADDRESS		PIPE SIZES & QUANT. (IN FEET ±)			
		METER NUMBER & SIZE	¾"	1"	1 ½"	2"
10	M R	984 N SILVER LODE TR 1"		±15'		
11	M R	971 N SILVER LODE TR 1"		±22'		
12	M R	965 N SILVER LODE TR 1"		±33'		
13	R	951 N SILVER LODE TR 1"		±1'		
14	R	947 N SILVER LODE TR 1"		±21'		
15	R	941 N SILVER LODE TR 1"		±22		
16	R	935 N SILVER LODE TR 1"		±26'		
17	R	936 N SILVER LODE TR 1"		±10'		
18	R	966 N SILVER LODE TR 1"		±1'		
TOTAL QUANTITIES OF CU PIPE FOR SERVICE WORK ONLY				±313'		

LEGEND

(153) METER NOT LOCATED

(144) METER NOT LOCATED

NOTES

1. SEE SHEET 9 FOR CONTROL PLAN.
2. SEE TW SD-309 AND SD-310 FOR ALL WATER SERVICE RENEWALS.

Kimley»Horn

© 2022 KIMLEY-HORN AND ASSOCIATES, INC.
333 EAST WETMORE ROAD, SUITE 280
TUCSON, ARIZONA 85705 (520) 615-9191

NO.	BY	DATE	REVISION	APPR.	DATE

Registered Professional Engineer (Civil)
CERTIFICATE NO. 38413
RAY MONTOYA
Date Signed 10/7/22
ARIZONA, U.S.A.
Expires 12/31/23

CITY OF NOGALES
WATER MAIN REPLACEMENT
ROYAL ROAD

SILVER LODE TRAIL
STA 134+00 TO STA 145+02

DESIGNED BY: ROM/GAG	DATE 07/22	SURVEY REQUEST NO.	23 OF 33
DRAWN BY: KMT/DIM	DATE 07/22	SCALE: VERT.: NO SCALE HORIZ.: 1"=40'	PLAN NO.
CHECKED BY: ROM/RPM	DATE 08/22		

Contact Arizona 811 at least two full working days before you begin excavation
ARIZONA811
Call 811 or click Arizona811.com

Plotted By:Karli.timlin Date:October 13, 2022 File Path:K:\TUC_WaterResources\098036008_City Of Nogales\CADD\Water Plans Royal Road\3.201\3.201Royal Road Wtr Plans Silver Lode Trail.dwg

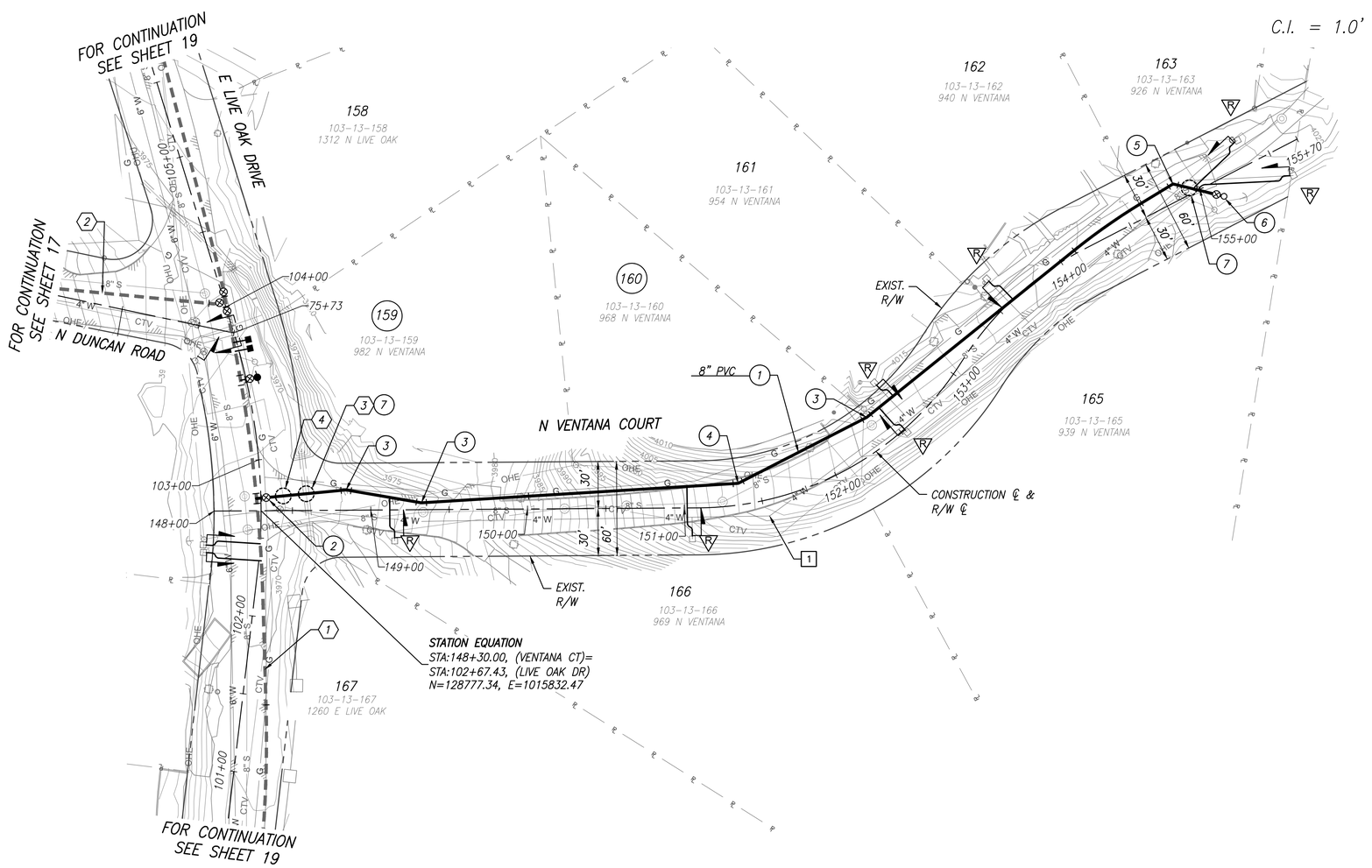

REMOVE/ ABANDON NOTES

1	STA:148+06, OFF:3'RT TO STA:154+96, OFF:8'LT ABANDON EXIST 4" WATER IN PLACE	±690 LF

CONSTRUCTION NOTES

1	STA:148+27, OFF:8'LT TO STA:155+08, OFF:8'RT 8" PVC DR14 (CL305) PIPE PER TW SD-115 & SD-650	±666 LF
2	8" GATE VALVE PER TW SD-300	1 EA
3	STA:148+84, OFF:13'LT, STA:149+32, 4'LT, STA:152+38, OFF:21'LT 8" 11.25° BEND PER TW SD-600	3 EA (NPI)
4	STA:151+36, OFF:14'LT 8" 22.5° BEND PER TW SD-600	1 EA (NPI)
5	STA:154+86, OFF:11'LT 8" 45° BEND PER TW SD-600	1 EA (NPI)
6	STA:155+08, 8'RT (LOCATION OF GATE VALVE) 8" GATE VALVE PER TW SD-300	1 EA
	STA:155+12, 11'RT (LOCATION OF DVA) 2" DVA PER TW SD-400	1 EA
7	8" DI (CL305) PIPE AT WATER CROSSING PER DETAIL ON SHEET 29 SEE SHEET 29 FOR SEWER CROSSING PROFILE	±15 LF

REFERENCE NOTES

1. SEE SHEET 19 FOR LATERAL WATER MAIN
2. SEE SHEET 17 FOR LATERAL WATER MAIN
3. SEE SHEET 28 FOR STORM CROSSING PROFILE, PROTECT IN PLACE
4. UTILITY CROSSING, SEE "NEW MAIN LOWERING" DETAIL ON SHEET 29

SERVICE WORK						
CODE		ADDRESS / METER NUMBER & SIZE	PIPE SIZES & QUANT. (IN FEET ±) ¾"	1"	1 ½"	2"
1	R	982 N VENTANA CT / 1"		±19'		
2	R	968 N VENTANA CT / 1"		±20'		
3	R	954 N VENTANA CT / 1"		±12'		
4	R	926 N VENTANA CT / 1"		±40'		
5	R	1260 N LIVE OAK / 1"		±26'		

SERVICE WORK						
CODE		ADDRESS / METER NUMBER & SIZE	PIPE SIZES & QUANT. (IN FEET ±) ¾"	1"	1 ½"	2"
6	R	969 N VENTANA CT / 1"		±32'		
7	R	939 N VENTANA CT / 1"		±22' ±59'		
8	R	940 N VENTANA CT / 1"		±20'		
TOTAL QUANTITIES OF CU PIPE FOR SERVICE WORK ONLY				±250'		

LEGEND

(159) METER NOT LOCATED

(160) METER NOT LOCATED

NOTES

1. SEE SHEET 10 FOR CONTROL PLAN.
2. SEE TW SD-309 AND SD-310 FOR ALL WATER SERVICE RENEWALS.

Contact Arizona 811 at least two full working days before you begin excavation
ARIZONA811
Call 811 or click Arizona811.com

Kimley»Horn
© 2022 KIMLEY-HORN AND ASSOCIATES, INC.
333 EAST WETMORE ROAD, SUITE 280
TUCSON, ARIZONA 85705 (520) 615-9191

NO.	BY	DATE	REVISION	APPR.	DATE

Registered Professional Engineer (Civil) CERTIFICATE NO. 38413 RAY MONTOYA Date Signed 08/22/22 ARIZONA, U.S.A.
Expires 12/31/23

CITY OF NOGALES
WATER MAIN REPLACEMENT
ROYAL ROAD

VENTANA COURT
STA 148+29 TO STA 154+70

DESIGNED BY: ROM/GAG	DATE 07/22	SURVEY REQUEST NO:	24 OF 33
DRAWN BY: KMT/DIM	DATE 07/22	SCALE: VERT.: NO SCALE HORIZ.: 1"=40'	PLAN NO.
CHECKED BY: ROM/RPM	DATE 08/22		

Plotted By:Karli.Timlin Date:October 13, 2022 File Path:K:\TUC_WaterResources\098036008_City Of Nogales\CADD\Water Plans Royal Road\3.201\3.201Royal Road Wtr Plans Ventana & Storage Tank.dwg

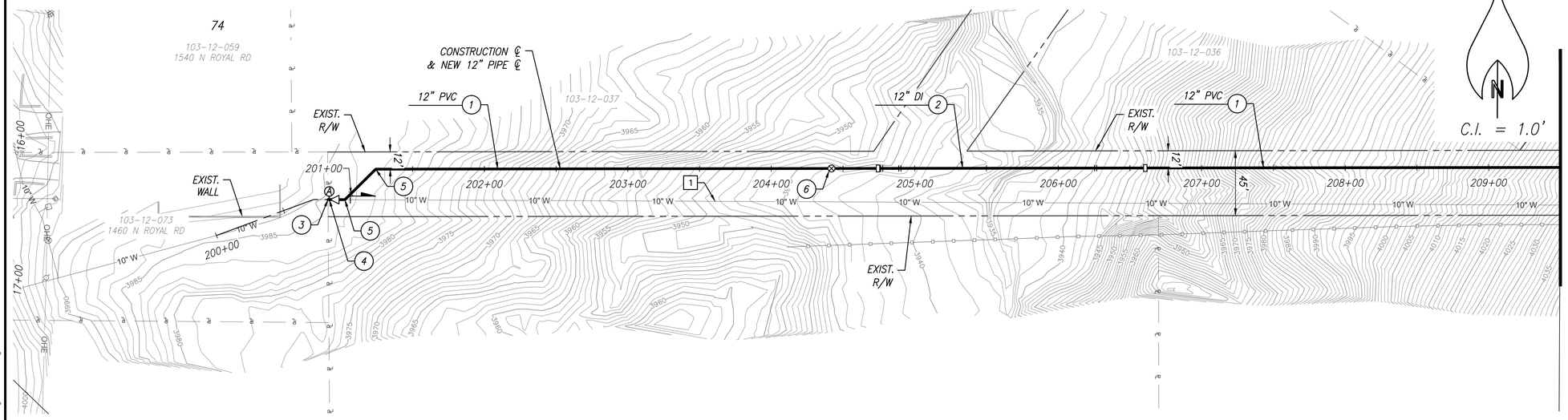

REMOVE/ ABANDON NOTES

1	STA:200+82, OFF:0'T TO STA:208+50, OFF:26'RT ABANDON EXIST 10" WATER IN PLACE	±759LF

CONSTRUCTION NOTES

1	STA:200+82 TO STA:204+74 STA:206+61 TO STA:209+50 12" PVC DR14 (CL305) PER TW SD-115	±682 LF
2	STA:204+74 TO STA:206+61 12" DI (CL350) PER TW SD-115	±190 LF
3	STA:200+82 10" CONNECTION	1 EA
4	STA:200+83 (LOCATION OF ARV & CONNECTION POINT) 1" COMBINATION ARV PER SD-330 1" CU PIPE	1 EA ±5 LF
5	STA:200+94, STA:201+24 12" 45° BEND PER TW SD-600	2 EA (NPI)
6	STA:204+53 12" GATE VALVE, B&C PER TW SD-300	1 EA

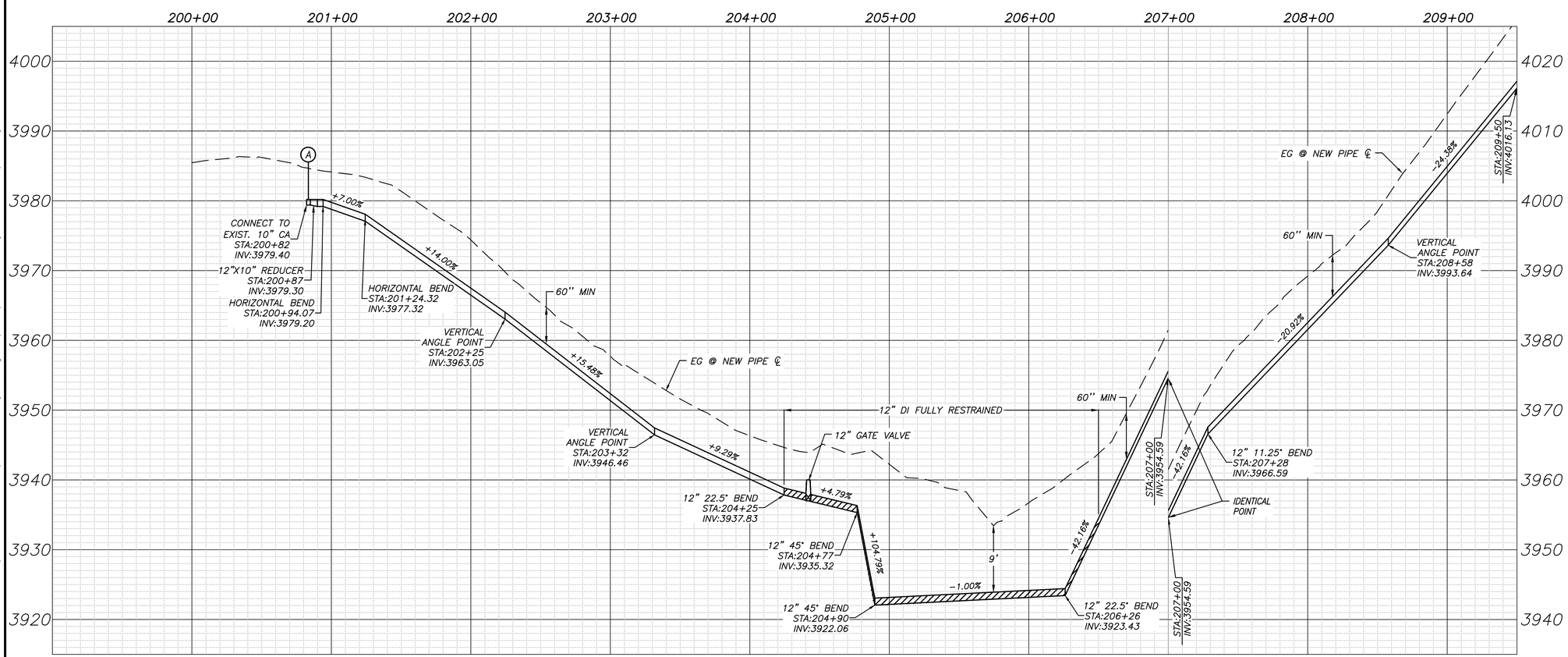

NOTES

1. CONTRACTOR TO FIELD VERIFY EXISTING UTILITIES PRIOR TO START CONSTRUCTION.
2. EXISTING UTILITIES NOT VERIFIED, SHOWN LOCATIONS SHALL BE CONSIDERED APPROXIMATE. REFER TO "ENGINEER'S STATEMENT", SEE SHEET 2.
3. SEE SHEET 11 FOR CONTROL PLAN.

Contact Arizona 811 at least two full working days before you begin excavation
ARIZONA811
Call 811 or click Arizona811.com

Kimley»Horn
© 2022 KIMLEY-HORN AND ASSOCIATES, INC.
333 EAST WETMORE ROAD, SUITE 280
TUCSON, ARIZONA 85705 (520) 615-9191

NO.	BY	DATE	REVISION	APPR.	DATE

Registered Professional Engineer (Civil)
CERTIFICATE NO. 38413
RAY MONTOYA
Date Signed 08/22/22
ARIZONA, U.S.A.
Expires 12/31/23

CITY OF NOGALES
WATER MAIN REPLACEMENT
ROYAL ROAD

STORAGE TANK WATERLINE PLAN & PROFILE
STA 200+00 TO STA 209+50

DESIGNED BY: ROM/GAG	DATE 07/22	SURVEY REQUEST NO.	25 OF 33
DRAWN BY: KMT/DIM	DATE 07/22	SCALE: VERT.: 1"=8' HORIZ.: 1"=40'	PLAN NO.
CHECKED BY: ROM/RPM	DATE 08/22		

Plotted By:Karli.Timlin Date:October 13, 2022 File Path:K:\TUC_WaterResources\098036008_City Of Nogales\CADD\Water Plans Royal Road.3.201\3.201Royal Road Wtr Plans Ventana & Storage Tank.dwg

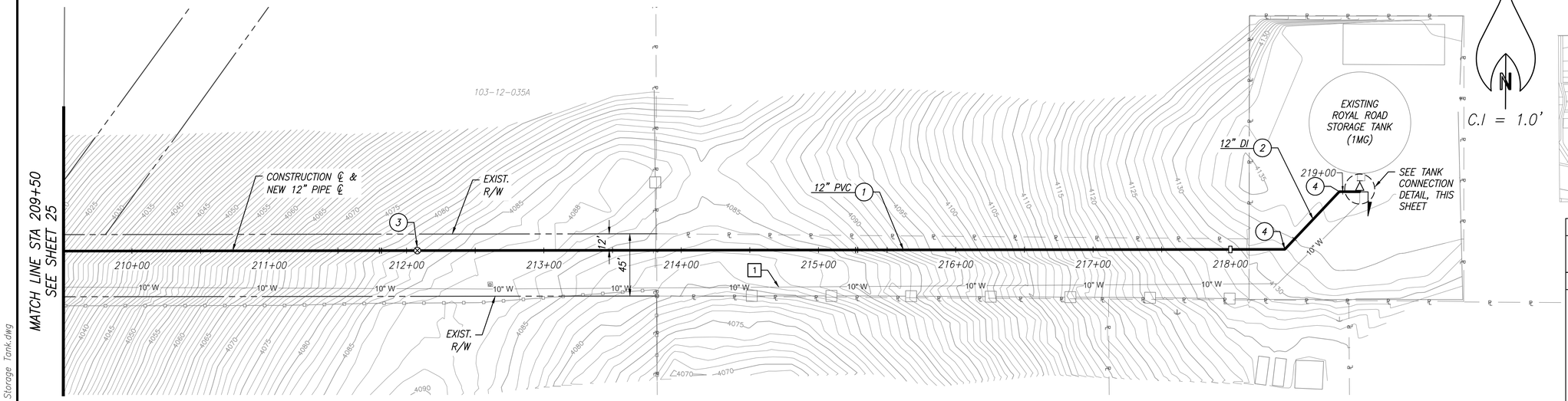

REMOVE/ ABANDON NOTES		
1	STA:208+50, OFF:26'RT TO STA:217+94, OFF:25'RT ABANDON EXIST 10" WATER IN PLACE	±970 LF

CONSTRUCTION NOTES		
1	STA:209+50 TO STA:219+20 12" PVC DR14 (CL305) PER TW SD-115	±850 LF
2	STA:218+00 TO STA:219+20 12" DI (CL350) PER TW SD-115	±120 LF
3	STA:212+08 12" GATE VALVE, B&C PER TW SD-300	1 EA
4	STA:218+40, STA:218+97 12" 45° BEND PER TW SD-600	2 EA (NPI)
5	STA:219+12 12" 90° BEND PER TW SD-600	1 EA (NPI)
6	STA:219+16 ECCENTRIC REDUCER 12"X10"	1 EA

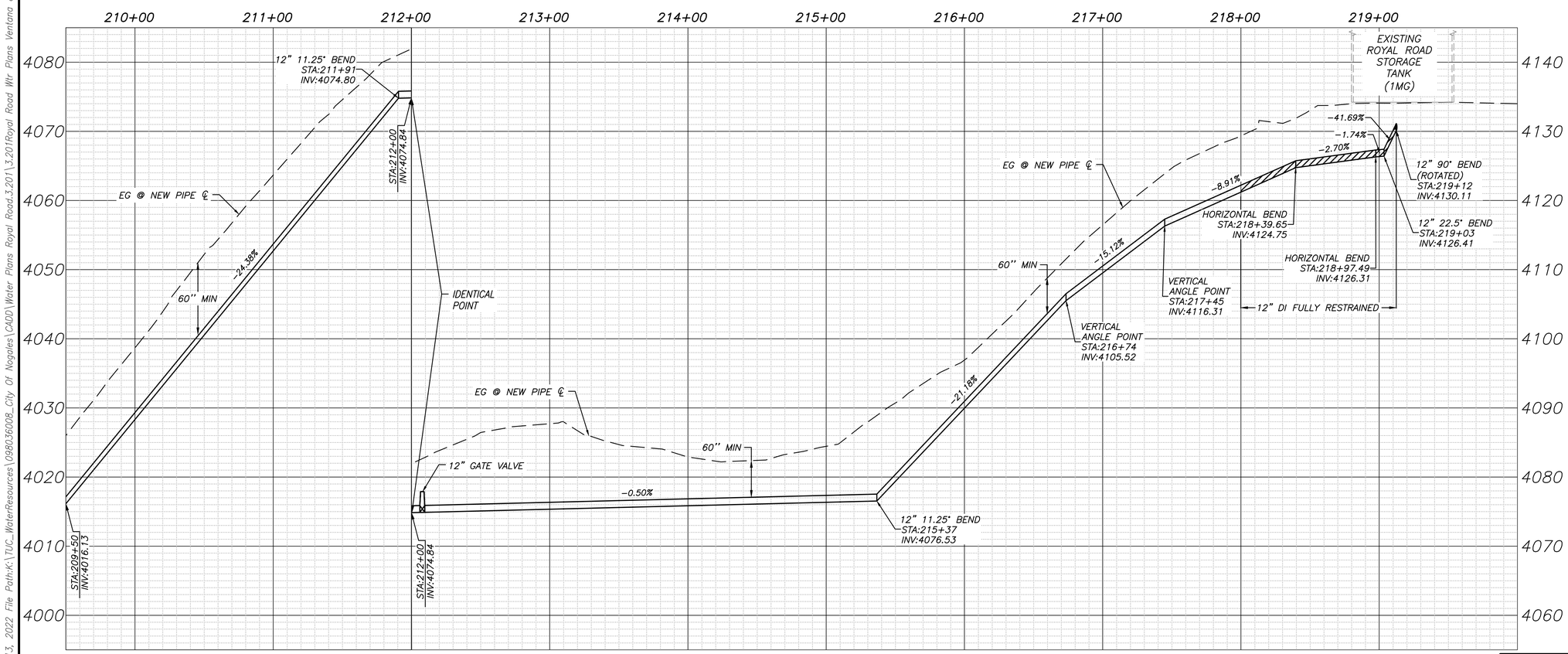

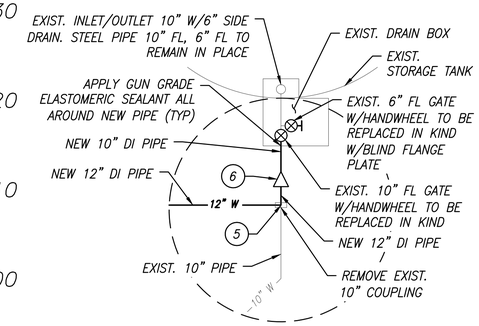

TANK CONNECTION DETAIL

NOTES

1. CONTRACTOR TO FIELD VERIFY EXISTING UTILITIES PRIOR TO START CONSTRUCTION.
2. EXISTING UTILITIES NOT VERIFIED, SHOWN LOCATIONS SHALL BE CONSIDERED APPROXIMATE. REFER TO "ENGINEER'S STATEMENT", SEE SHEET 2.
3. SEE SHEET 11 FOR CONTROL PLAN.

Contact Arizona 811 at least two full working days before you begin excavation
ARIZONA811
Call 811 or click Arizona811.com

Kimley»Horn
© 2022 KIMLEY-HORN AND ASSOCIATES, INC.
333 EAST WETMORE ROAD, SUITE 280
TUCSON, ARIZONA 85705 (520) 615-9191

NO.	BY	DATE	REVISION	APPR.	DATE

Registered Professional Engineer (Civil) CERTIFICATE NO. 38413 RAY MONTOYA Date Signed 08/22/22 ARIZONA, U.S.A.
Expires 12/31/23

CITY OF NOGALES
WATER MAIN REPLACEMENT
ROYAL ROAD

STORAGE TANK WATERLINE PLAN & PROFILE
STA 209+50 TO STA 218+04

DESIGNED BY: ROM/GAG	DATE 07/22	SURVEY REQUEST NO.	26 OF 33
DRAWN BY: KMT/DIM	DATE 07/22	SCALE: VERT.: 1"=4' HORIZ.: 1"=40'	PLAN NO.
CHECKED BY: ROM/RPM	DATE 08/22		

Plotted By:Karli.Timlin Date:October 13, 2022 File Path:K:\TUC_WaterResources\098036008_City Of Nogales\CADD\Water Plans Royal Road\3.201\3.201Royal Road Wtr Plans Ventana & Storage Tank.dwg

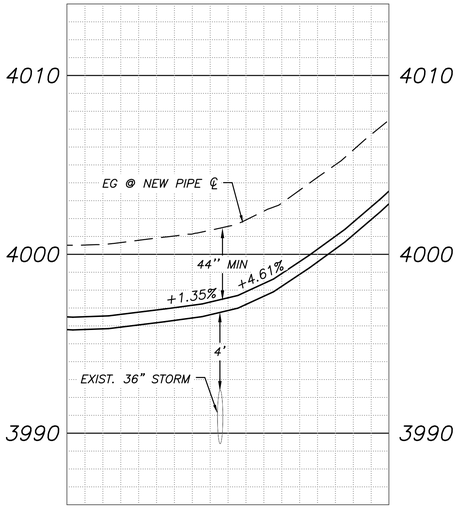

STA:27+06, OFF:14'RT
ROYAL ROAD
SEE SHEET 13

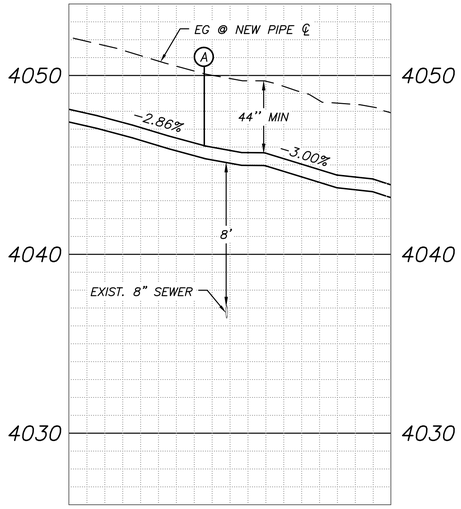

STA:34+63, OFF:15'RT
ROYAL ROAD
SEE SHEET 13

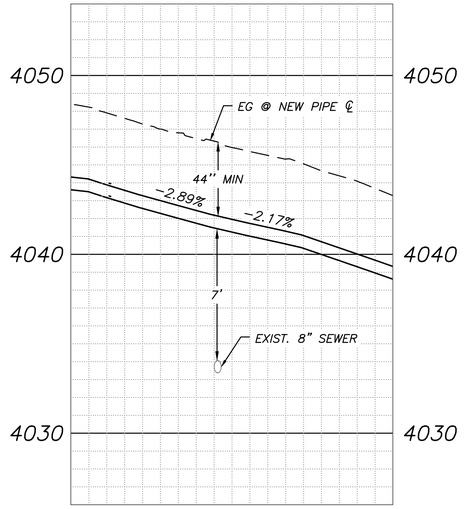

STA:36+08, OFF:1'RT
ROYAL ROAD
SEE SHEET 14

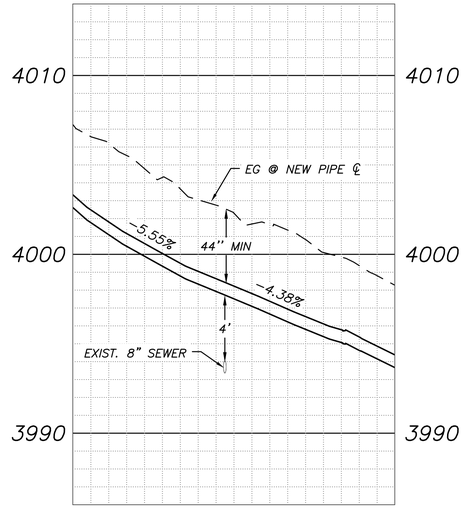

STA:43+03, OFF:23'LT
ROYAL ROAD
SEE SHEET 14

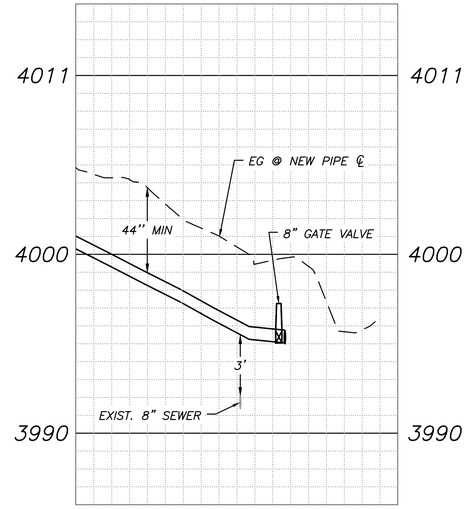

STA:80+52, OFF:14'LT
ROYAL ROAD CIRCLE
SEE SHEET 14

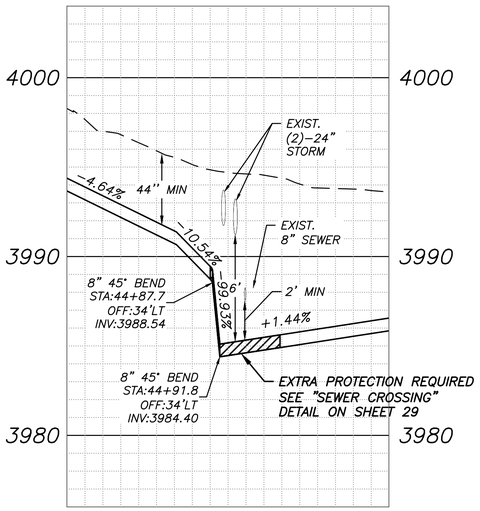

STA:45+00, OFF:34'LT
ROYAL ROAD
SEE SHEET 14

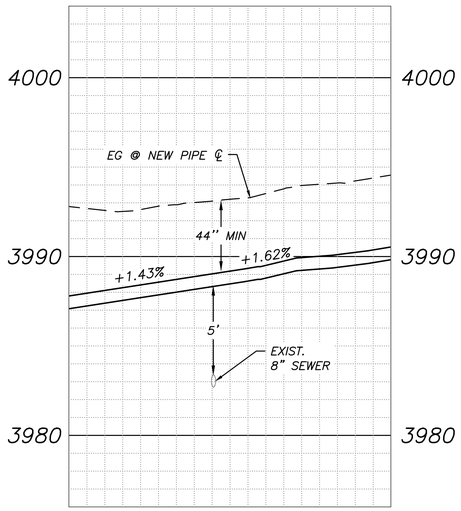

STA:47+38, OFF:13'LT
ROYAL ROAD
SEE SHEET 15

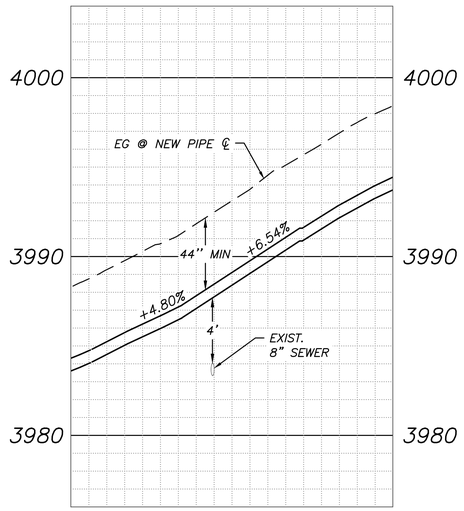

STA:50+95, OFF:41'LT
ROYAL ROAD
SEE SHEET 15

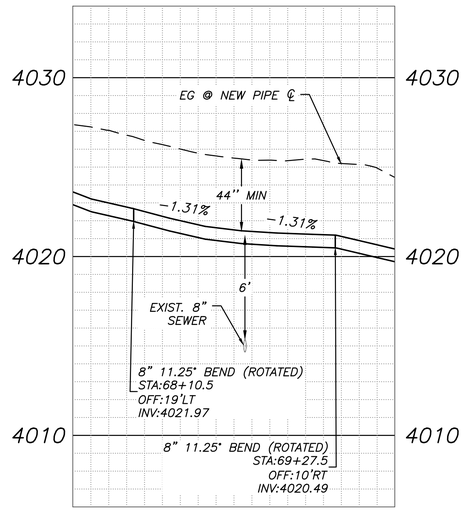

STA:68+82, OFF:14'LT
DUNCAN DRIVE
SEE SHEET 16

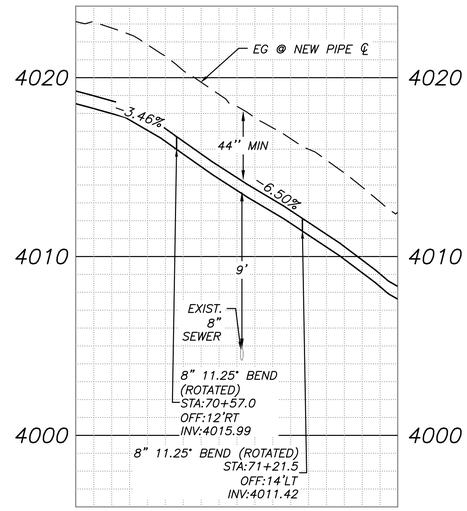

STA:70+91, OFF:1'LT
DUNCAN DRIVE
SEE SHEET 17

Contact Arizona 811 at least two full working days before you begin excavation
ARIZONA811
Call 811 or click Arizona811.com

Kimley»Horn
© 2022 KIMLEY-HORN AND ASSOCIATES, INC.
333 EAST WETMORE ROAD, SUITE 280
TUCSON, ARIZONA 85705 (520) 615-9191

NO.	BY	DATE	REVISION	APPR.	DATE

Registered Professional Engineer (Civil)
CERTIFICATE NO.
38413
RAY
MONTOYA
Date Signed 08/22/22
ARIZONA, U.S.A.
Expires 12/31/23

CITY OF NOGALES
WATER MAIN REPLACEMENT
ROYAL ROAD

STORM & SEWER CROSSING PROFILES

DESIGNED BY: ROM/GAG	DATE 07/22	SURVEY REQUEST NO.	27 OF 33
DRAWN BY: KMT/DIM	DATE 07/22	SCALE: VERT.: 1"=4' HORIZ.: 1"=40'	PLAN NO.
CHECKED BY: ROM/RPM	DATE 08/22		

Plotted By:Karli.Timlin Date:October 13, 2022 File Path:K:\TUC_WaterResources\098036008_City Of Nogales\CADD\Water Plans Royal Road.3.201\3.201Royal Road Storm & Swr Crossing Prof 27-29.dwg

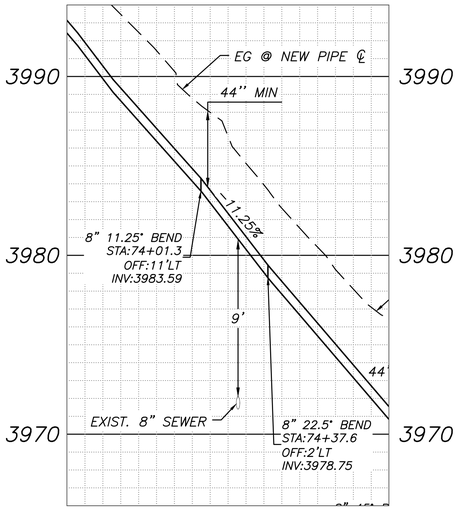

STA:74+21, OFF:7'LT
DUNCAN DRIVE
SEE SHEET 17

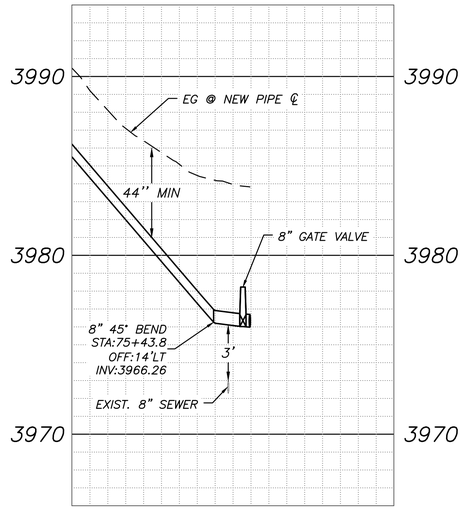

STA:75+50, OFF:21'LT
DUNCAN DRIVE
SEE SHEET 17

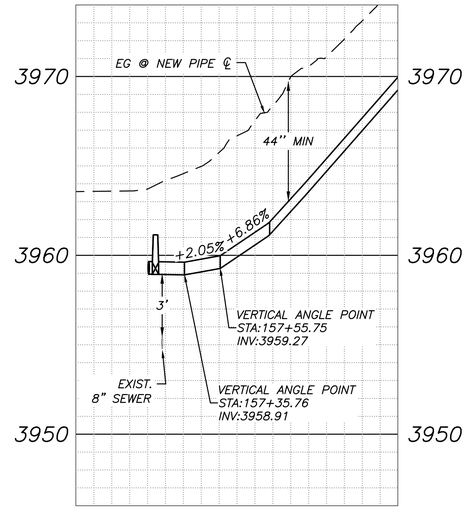

STA:157+23, OFF:20'RT
MAHEN ROAD
SEE SHEET 18

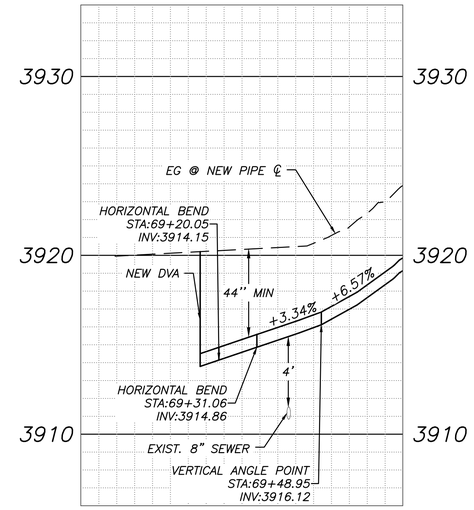

STA:90+71, OFF:7'LT
LIVE OAK DRIVE
SEE SHEET 18

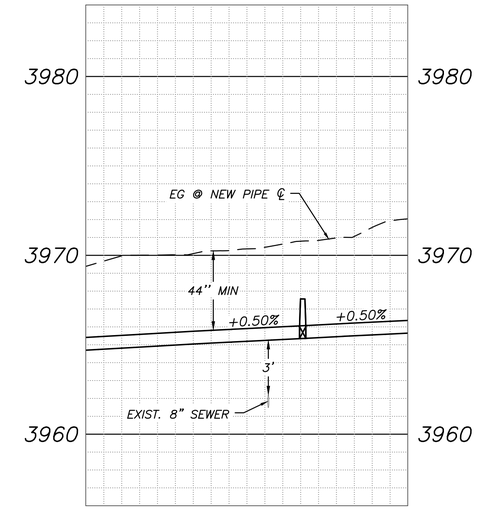

STA:102+56, OFF:1'RT
LIVE OAK DRIVE
SEE SHEET 19

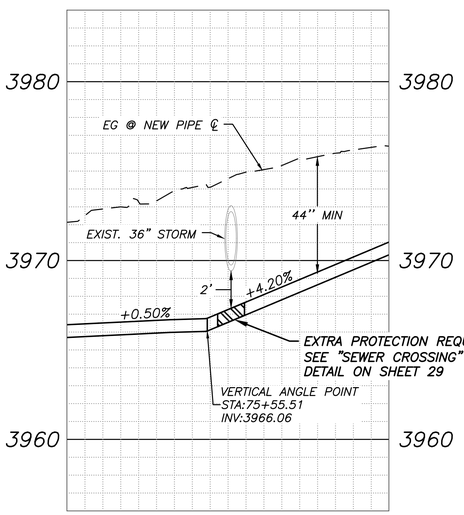

STA:104+36, OFF:3'RT
LIVE OAK DRIVE
SEE SHEET 19

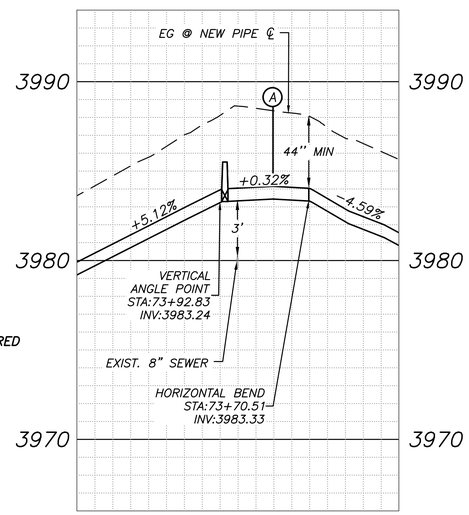

STA:107+93, OFF:20'RT
LIVE OAK ROAD
SEE SHEET 19

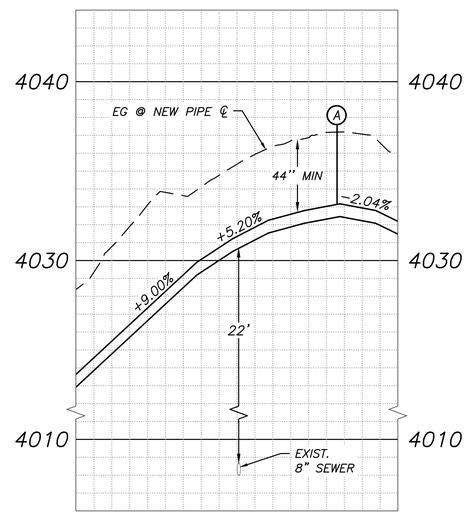

STA:119+03, OFF:16'RT
DAVID DRIVE
SEE SHEET 21

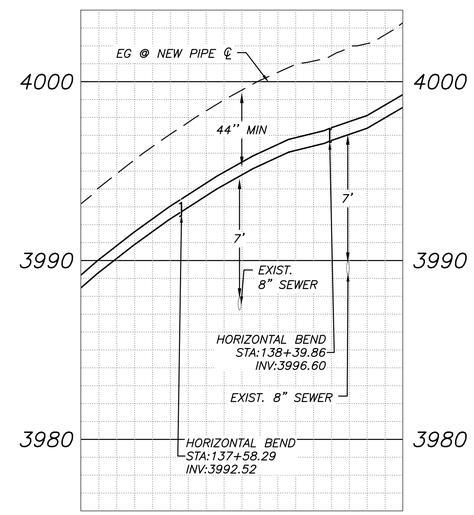

STA:137+89, OFF:5'LT &
STA:138+50, OFF:13'LT
SILVER LODE TRAIL
SEE SHEET 23

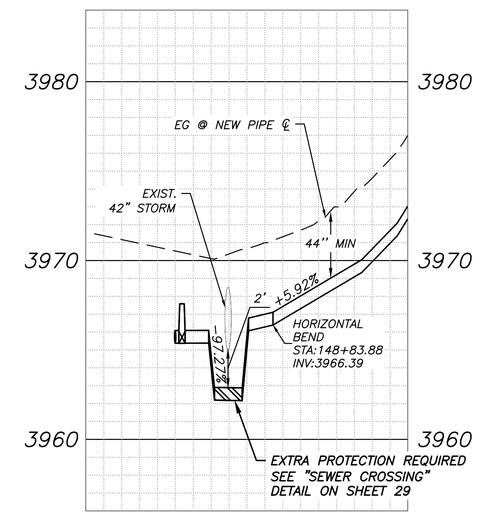

STA:148+59, OFF:11'LT
VENTANA COURT
SEE SHEET 24

Contact Arizona 811 at least two full working days before you begin excavation
ARIZONA811
Call 811 or click Arizona811.com

Kimley»Horn
© 2022 KIMLEY-HORN AND ASSOCIATES, INC.
333 EAST WETMORE ROAD, SUITE 280
TUCSON, ARIZONA 85705 (520) 615-9191

NO.	BY	DATE	REVISION	APPR.	DATE

Registered Professional Engineer (Civil)
CERTIFICATE NO.
38413
RAY
MONTOYA
Date Signed 08/22/22
ARIZONA, U.S.A.
Expires 12/31/23

CITY OF NOGALES
WATER MAIN REPLACEMENT
ROYAL ROAD

STORM & SEWER CROSSING PROFILES

DESIGNED BY: ROM/GAG	DATE 07/22	SURVEY REQUEST NO.	28 OF 33
DRAWN BY: KMT/DIM	DATE 07/22	SCALE: VERT.: 1"=4' HORIZ.: 1"=40'	PLAN NO.
CHECKED BY: ROM/RPM	DATE 08/22		

Plotted By:Karli.Timlin Date:October 13, 2022 File Path:K:\TUC_WaterResources\098036008_City Of Nogales\CADD\Water Plans Royal Road.3.201\3.201Royal Road Storm & Swr Crossing Prof 27-29.dwg

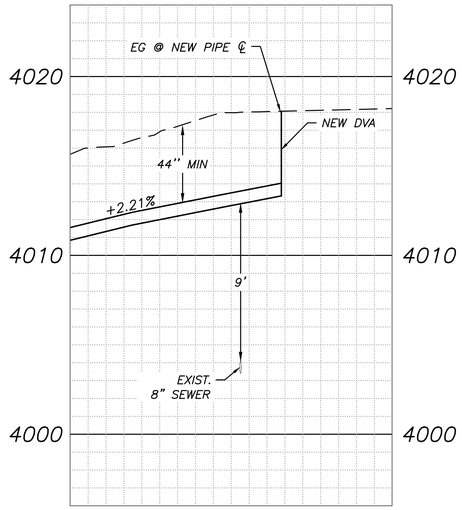

STA:154+94, OFF:4'LT
VENTANA COURT
SEE SHEET 24

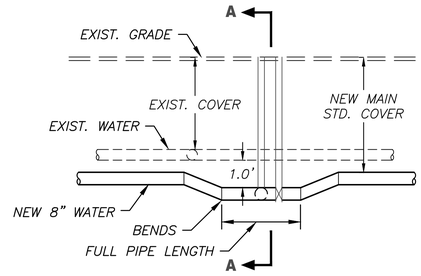

DETAIL

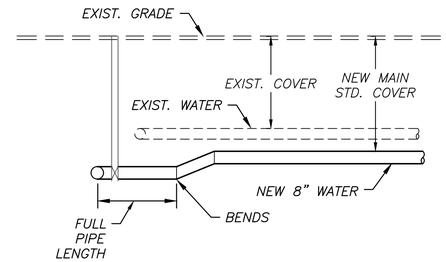

SECTION A - A

1. CONTRACTOR TO FIELD VERIFY EXISTING UTILITIES PRIOR TO START CONSTRUCTION.
2. EXISTING UTILITIES NOT VERIFIED, SHOWN LOCATIONS SHALL BE CONSIDERED APPROXIMATE. REFER TO "ENGINEER'S STATEMENT", SEE SHEET 2.
3. CONTRACTOR TO ASSESS AND COORDINATE EACH LOWERING CROSSING WITH UTILITY COMPANY. DEFLECTION FITTINGS SHALL BE SELECTED ACCORDINGLY AND THEY SHOULD BE RESTRAINED PER TUCSON WATER SD 600.

NEW MAIN LOWERING

NO SCALE

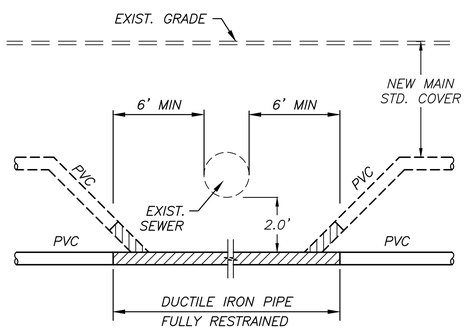

1. MINIMUM CLEARANCE SHOWN HAS BEEN APPROVED BY THE PIMA COUNTY WASTEWATER RECLAMATION DEPARTMENT PER VARIANCE NO. VR-2021-09 DATED NOVEMBER 2, 2021.
2. EXISTING SEWER LINE TO BE PROTECTED IN PLACE AND MAINTAIN UNDISTURBED

SEWER CROSSING

NO SCALE

Contact Arizona 811 at least two full working days before you begin excavation
ARIZONA811
Call 811 or click Arizona811.com

Kimley»Horn
© 2022 KIMLEY-HORN AND ASSOCIATES, INC.
333 EAST WETMORE ROAD, SUITE 280
TUCSON, ARIZONA 85705 (520) 615-9191

NO.	BY	DATE	REVISION	APPR.	DATE

Registered Professional Engineer (Civil)
CERTIFICATE NO.
38413
RAY
MONTOYA
Date Signed 08/22/22
ARIZONA, U.S.A.
Expires 12/31/23

CITY OF NOGALES
WATER MAIN REPLACEMENT
ROYAL ROAD

SEWER CROSSING PROFILE AND
WATER CROSSING DETAIL

DESIGNED BY: ROM/GAG	DATE: 07/22	SURVEY REQUEST NO.	29 OF 33
DRAWN BY: KMT/DIM	DATE: 07/22	SCALE: VERT.: 1"=4' HORIZ.: 1"=40'	PLAN NO.
CHECKED BY: ROM/RPM	DATE: 08/22		

Plotted By:Karli.Timlin Date:October 13, 2022 File Path:K:\TUC_WaterResources\098036008_City Of Nogales\CADD\Water Plans Royal Road.3.201\3.201Royal Road Storm & Swr Crossing Prof 27-29.dwg

PAVEMENT REPLACEMENT PATCH	
ROYAL ROAD	4254 SY
DUNCAN ROAD	1859 SY
LIVE OAK DRIVE	2713 SY
ROYAL ROAD CIRCLE	54 SY
DAVID DRIVE	1668 SY
SILVER LODE TRAIL	1241 SY
MAHEN ROAD	436 SY
VENTANA COURT	801 SY
WATER SERVICES	764 SY

Contact Arizona 811 at least two full working days before you begin excavation
ARIZONA811
Call 811 or click Arizona811.com

Kimley»Horn
© 2022 KIMLEY-HORN AND ASSOCIATES, INC.
333 EAST WETMORE ROAD, SUITE 280
TUCSON, ARIZONA 85705 (520) 615-9191

NO.	BY	DATE	REVISION	APPR.	DATE

Registered Professional Engineer (Civil)
CERTIFICATE NO.
38413
RAY
MONTOYA
Date Signed 08/22/22
ARIZONA, U.S.A.
Expires 12/31/23

CITY OF NOGALES
WATER MAIN REPLACEMENT
ROYAL ROAD

PAVEMENT REPLACEMENT

DESIGNED BY: ROM/GAG	DATE 07/22	SURVEY REQUEST NO.	30 OF 33
DRAWN BY: KMT/DIM	DATE 07/22	SCALE: VERT.: N/A HORIZ.: 1"=150'	PLAN NO.
CHECKED BY: ROM/RPM	DATE 08/22		

Plotted By:Gerardo.Gonzalez Date:October 13, 2022 File Path:K:\TUC_WaterResources\098036008_City Of Nogales\CADD\Water Plans Royal Road.3.201\3.201Royal Road Wtr Plans Pavement Replc.dwg

NOTES:

1. Where a water main crosses above a gravity sewer with a 2' or greater vertical clearance (outside surface to outside surface), no extra protection is required. Where a water main crosses above a pressure sewer with 6' or greater vertical clearance, no extra protection is required.

2. Where a water main must cross above a gravity sewer with less than 2' of clearance, construct or replace the sewer line with ductile iron pipe (D.I.P.) or approved equal. The D.I.P. must have a "push-on" joint or approved equal if the sewer joints are located 6' or more beyond the outside surface of the water main. If a joint is located less than 6' from the outside surface of the water main, then a restrained joint or approved equal shall be used. See the plan views on sheet 3 for reference. In no case shall the water main be less than 1' above a gravity sewer or 2' above a pressure sewer.

3. Where a water main crosses below either a gravity sewer or a pressure sewer, construct or replace the sewer line with D.I.P. or approved equal following the guidelines given in Note No. 2. In no case shall the water main be less than 2' below either a gravity or pressure sewer line.

4. The minimum horizontal clearance without extra protection between a water main and a pressure or gravity sewer line shall be 6' outside surface to outside surface.

5. The minimum horizontal clearance between a water main and a sewer manhole shall be 6' from the outside surface of the water main to the centerline of the manhole.

6. Where a 6' horizontal clearance cannot be maintained with a gravity sewer, construct or replace the sewer line with D.I.P. or approved equal following the guidelines given in Note No. 2. In no case shall a gravity sewer line be located less than 2' horizontally from a water main.

7. In no case shall a pressure sewer line be located less than 6' horizontally from a water main.

8. The American National Standard for the thickness design of Ductile Iron Pipe (ANSI/AWWA C150/A21.50) shall be used to determine the required class of D.I.P. except that for D.I.P. with a diameter of 3" through 24", a minimum of Class 350 is required and for D.I.P. with a diameter greater than 24", a minimum of Class 200 is required.

9. Where the sewer line is a gravity sewer, the D.I.P. installation of replacement pipe shall extend a minimum of 6' beyond each side of the water main, measured horizontally from and perpendicular to the water main.

10. Where the sewer line is a pressure sewer, the D.I.P. installation of replacement pipe shall extend a minimum of 10' beyond each side of the water main, measured horizontally from and perpendicular to the water main.

11. In general, when unusual conditions such as, but not limited to, highway or bridge crossings prevent the water and sewer line separations required by this detail from being met, the Pima County Regional Wastewater Reclamation Department will review and may approve (subject to Arizona Department of Environmental Quality's approval), requests for authorization to use alternate construction techniques and joints on a case-by-case basis.

12. All Ductile Iron Pipe shall be internally lined to meet the most recent Pima County Regional Wastewater Reclamation Department specifications.

ISSUED:	STANDARD DETAIL	DETAIL NO.
6/97	SEWER/WATER CROSSING DETAILS	SD-106
REVISED: 11/17		SHEET 1 OF 4

PLAN VIEWS

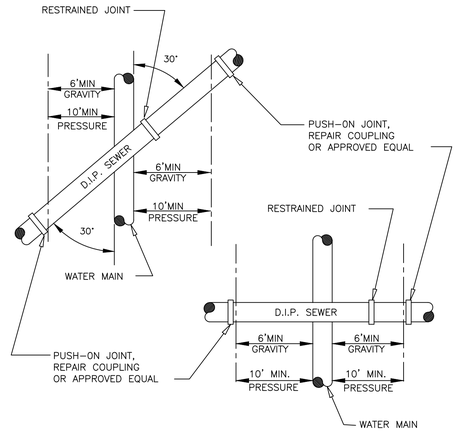

NOTE:

FOR ALL CONSTRUCTION OF SEWER REPLACEMENT WITH LESS THAN 30° ANGLE (PER DETAIL) SURVEY (PER TUCSON WATER SECTION 0215) SHALL BE PERFORMED FOR THE NEW SEWER MAIN.

ISSUED:	STANDARD DETAIL	DETAIL NO.
REVISED: 8/17	SEWER/WATER CROSSING DETAIL	SD-106
		SHEET 4 OF 4

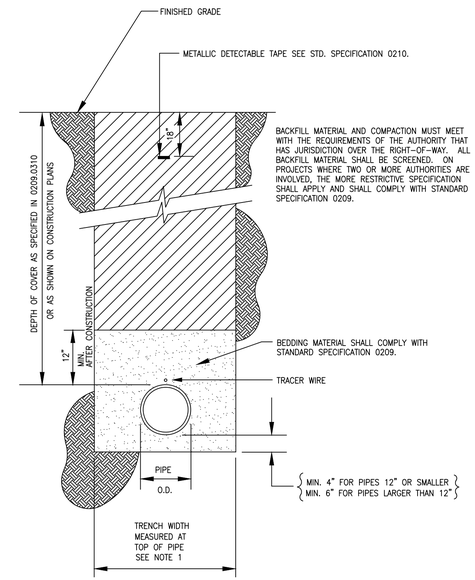

1. TRENCH WIDTH MEASURED AT THE TOP OF THE PIPE SHALL BE 18" FOR 4" AND 6" MAINS AND 24" FOR 8" MAINS. TRENCH WIDTH FOR 12" AND LARGER SHALL BE O.D. + 18" MIN., O.D. + 24" MAX, OR PER OSHA REQUIREMENTS.

2. BEDDING MATERIAL SHALL BE ACTUAL TRENCH WIDTH (BANK TO BANK)

3. PAVEMENT PATCHING SHALL CONFORM WITH THE REQUIREMENTS OF THE PIMA ASSOCIATION OF GOVERNMENTS

ISSUED:	STANDARD DETAIL	DETAIL NO.
6/97	PIPE BEDDING AND TRENCH BACKFILL	SD-115
REVISED: 2/16		

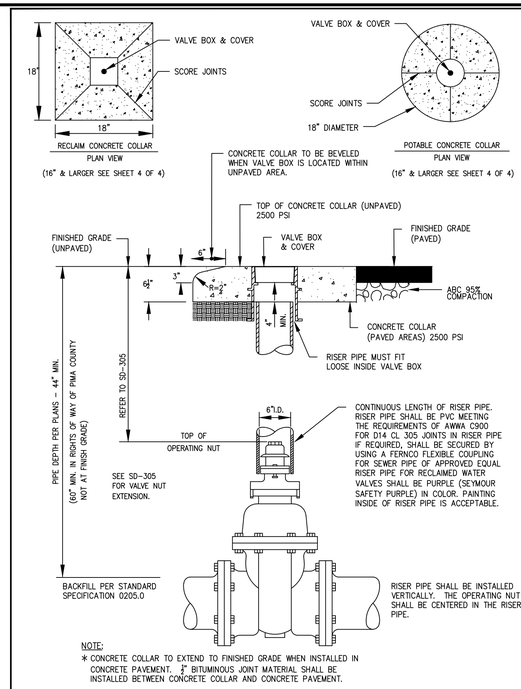

NOTE:
* CONCRETE COLLAR TO EXTEND TO FINISHED GRADE WHEN INSTALLED IN CONCRETE PAVEMENT. 1/2" BITUMINOUS JOINT MATERIAL SHALL BE INSTALLED BETWEEN CONCRETE COLLAR AND CONCRETE PAVEMENT.

ISSUED:	STANDARD DETAIL	DETAIL NO.
6/97	VALVE BOX INSTALLATION	SD-300
REVISED: 11/16		

COPPER SERVICE MATERIALS STANDARD SPECIFICATION 1416

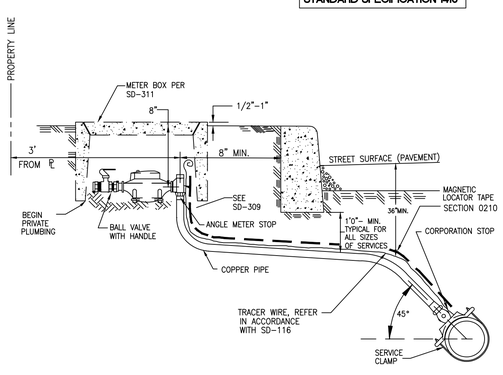

NOTES:

1. SERVICES SHALL NOT BE INSTALLED IN DRIVEWAYS OR SIDEWALKS. SERVICES MUST BE 5' FROM ANY OTHER UTILITY.

2. WHEN SINGLE SERVICES ARE INSTALLED AT A COMMON LOT LINE THE TAPS MUST BE 30 INCHES APART A SINGLE TRENCH MAY BE USED WITH 24" OF SEPARATION BETWEEN SERVICE LINES.

3. PRIVATE PLUMBING SHALL BE ADJUSTED TO MATCH NEW METER ELEVATIONS.

ISSUED:	STANDARD DETAIL	DETAIL NO.
6/97	WATER SERVICE CONNECTION 1"	SD-309
REVISED: 4/16		

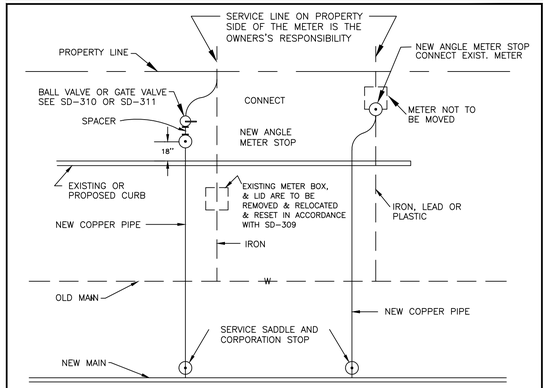

SERVICE RENEWAL (METER TO BE RELOCATED)

SERVICE RENEWAL (METER NOT RELOCATED)

TYPICAL SERVICE CONDITIONS

SERVICE RENEWAL
(METER TO BE RELOCATED)
INCLUDES:

TAP SERVICE SADDLE
CORPORATION STOP
COPPER (entire length)
ANGLE METER STOP
BALL VALVE OR GATE VALVE PER SD-309
ADAPTER FITTINGS
CONNECT EXISTING SERVICE LINE
MAGNETIC LOCATER TAPE SD 309 NOTE 2
TRACER WIRE SD 309 NOTE 2

SERVICE RENEWAL
(METER NOT RELOCATED)
INCLUDES:

TAP SERVICE SADDLE
CORPORATION STOP
COPPER PIPE (entire length)
ANGLE METER STOP
MAGNETIC LOCATER TAPE SD-309 NOTE 2
TRACER WIRE SD-309 NOTE 2
CONNECT EXISTING METER

NOTE
IN ALL CASES THE CONTRACTOR MUST RESET THE METER BOX TO FINAL GRADE IN ACCORDANCE WITH SD-309.

ISSUED:	STANDARD DETAIL	DETAIL NO.
6/97	SERVICE RENEWALS AND TIE-OVERS	SD-310
REVISED: 9/17		

SEE STANDARD SPECIFICATION 1413 AND SD-116

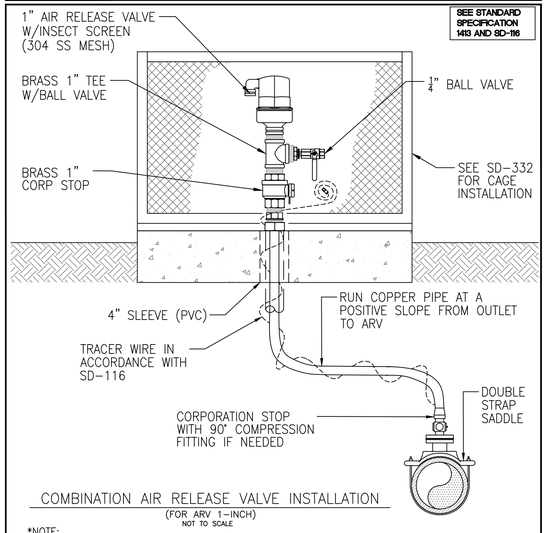

COMBINATION AIR RELEASE VALVE INSTALLATION
(FOR ARV 1-INCH)
NOT TO SCALE

*NOTE:

AIR RELEASES SHALL BE SET IN A FLAT STRIP OF LAND WHICH PARALLELS THE CURB, SIDEWALK OR WATERMAIN. SET THE AIR RELEASE 8" BACK OF CURB IN STREETS WITH CURBS. SET THE AIR RELEASE 3' FROM PROPERTY LINE IN STREETS WITHOUT CURBS, OR PER PLAN LOCATION.

90° COMPRESSION FITTINGS MAY BE INSTALLED TO ACHIEVE POSITIVE SLOPE.

ALL COPPER & BRASS SHALL BE INSULATED AND WRAPPED WITH 10 MIL TAPE.

ALL AIR RELEASE VALVE INSTALLATIONS REQUIRE A TRACER WIRE PER SECTION 210 & SD-116.

*AIR RELEASE VALVE SHALL BE LIGHTWEIGHT, PER APPROVED MATERIAL LIST (APPENDIX A).

ISSUED:	STANDARD DETAIL	DETAIL NO.
8/06	AIR RELEASE VALVE INSTALLATION 1"	SD-330
REVISED: 5/17		SHEET 1 OF 1

Contact Arizona 811 at least two full working days before you begin excavation
ARIZONA811
Call 811 or click Arizona811.com

Kimley»Horn

© 2022 KIMLEY-HORN AND ASSOCIATES, INC.
333 EAST WETMORE ROAD, SUITE 280
TUCSON, ARIZONA 85705 (520) 615-9191

NO.	BY	DATE	REVISION	APPR.	DATE

Registered Professional Engineer (Civil) CERTIFICATE NO. 38413 RAY MONTOYA Date Signed 08/22/22 ARIZONA, U.S.A.
Expires 12/31/23

CITY OF NOGALES
WATER MAIN REPLACEMENT
ROYAL ROAD

DETAIL SHEET

DESIGNED BY: ROM/GAG	DATE 07/22	SURVEY REQUEST NO.	31 OF 33
DRAWN BY: KMT/DIM	DATE 07/22	SCALE: VERT.: 1"=4' HORIZ.: 1"=40'	PLAN NO.
CHECKED BY: ROM/RPM	DATE 08/22		

Plotted By:Karli.timlin Date:October 13, 2022 File Path:K:\TUC_WaterResources\098036008_City Of Nogales\CADD\Water Plans Royal Road.3.201\3.201Royal Road Wtr DTL 30-32.dwg

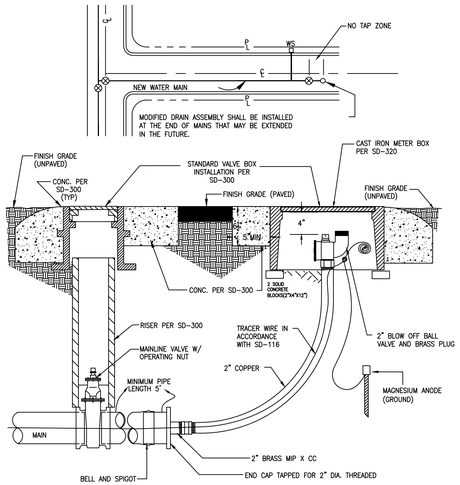

NOTES:

1. VALVE PIPE JOINTS, AND END CAP SHALL BE MECHANICALLY RESTRAINED IN ACCORDANCE WITH STANDARD SPECIFICATION 1406.
2. CONCRETE THRUST BLOCKS MAY BE USED IF APPROVED BY THE ENGINEER.
3. DRAIN VALVE ASSEMBLY SHALL BE INSTALLED ON 6" STUBS MORE THAN 5' IN LENGTH AND ON ALL 8" STUBS MORE THAN 10' IN LENGTH.
4. NO SERVICE TAPS WILL BE ALLOWED BETWEEN THE LINE VALVE AND THE BLOW OFF ASSEMBLY.

ISSUED:	STANDARD DETAIL	DETAIL NO.
6/97	DRAIN VALVE ASSEMBLY	SD-400
REVISED: 05/16		

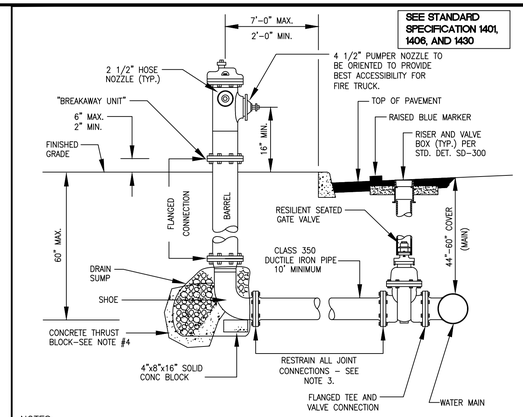

NOTES:

1. Hydrant shoe shall be a mechanical joint fitting.
2. Fire hydrants not in service shall be tagged by the contractor with "OUT OF SERVICE" rings. Rings shall be provided by Tucson Water. All hydrants will remain out of service until the project is accepted by Tucson Water.
3. All mechanically restrained joint connections shall be in accordance with Standard Specification 1406 and shall extend from water main tee to hydrant shoe.
4. Concrete thrust block per Standard Detail SD-610 shall only be used for extending existing pipe, which is not mechanically restrained, between the shoe and the main tee and approved by engineer.
5. A minimum of 8 cu.ft. of 3/4" gravel shall be provided for drain sump. Drain sump shall be a minimum of 3'-0" in diameter. Cover drain holes with drain sump material.
6. Hydrant laterals greater than 40 feet in length shall require a gate valve at the tee and within 10 feet of the hydrant and the pipe from the valve to the fire hydrant shall be Class 350 ductile iron.
7. For water mains at depths greater than 60 inches, the elevation of the hydrant shoe shall be adjusted to a depth no greater than 48 inches by the installation of fittings after the tee and gate valve.
8. Refer to Standard Detail SD-500 page 4 for stub out to be used for future fire hydrant installation.

ISSUED:	STANDARD DETAIL	DETAIL NO.
6/97	FIRE HYDRANT INSTALLATION	SD-500
REVISED: 8/09		

ALL THRUST RESTRAINTS SHALL BE IN COMPLIANCE WITH SECTION 1406.

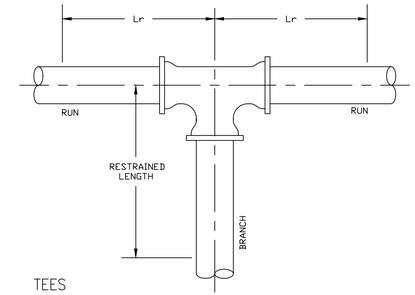

TEES

The minimum attached length of pipe (Lr) to extend in each direction along the run of the tee shall be a solid pipe without joints, fittings, etc. The length of the restrained branch shall be derived from the following table.

TEE SIZE & PIPE MATERIAL		MINIMUM ATTACHED LENGTH OF PIPE (Lr)									
		0'	2'	4'	6'	8'	10'	12'	14'	16'	18'	20'
		LENGTH OF RESTRAINED BRANCH										
PVC PIPE	4x4	74'	64'	53'	42'	32'	21'	11'	1'	1'	1'	1'
	6x4	74'	58'	42'	26'	11'	1'	1'	1'	1'	1'	1'
	6x6	104'	93'	82'	71'	61'	50'	39'	28'	18'	7'	1'
	8x4	74'	53'	31'	10'	1'	1'	1'	1'	1'	1'	1'
	8x6	104'	89'	75'	60'	46'	31'	17'	3'	1'	1'	1'
	8x8	135'	124'	113'	102'	91'	80'	69'	59'	48'	37'	26'
	12x4	74'	41'	7'	1'	1'	1'	1'	1'	1'	1'	1'
	12x6	104'	81'	58'	35'	13'	1'	1'	1'	1'	1'	1'
	12x8	135'	118'	101'	83'	66'	49'	32'	15'	1'	1'	1'
	12x12	189'	177'	166'	155'	144'	132'	121'	110'	98'	87'	76'
DI POLY WRAP	4x4	112'	96'	80'	64'	48'	32'	17'	1'	1'	1'	1'
	6x4	112'	88'	64'	40'	16'	1'	1'	1'	1'	1'	1'
	6x6	157'	141'	124'	108'	92'	75'	59'	43'	27'	10'	1'
	8x4	112'	80'	48'	15'	1'	1'	1'	1'	1'	1'	1'
	8x6	157'	135'	113'	91'	70'	48'	26'	4'	1'	1'	1'
	8x8	204'	187'	171'	154'	138'	121'	105'	88'	72'	55'	39'
	12x4	112'	61'	11'	1'	1'	1'	1'	1'	1'	1'	1'
	12x6	157'	122'	88'	54'	19'	1'	1'	1'	1'	1'	1'
	12x8	204'	178'	152'	126'	100'	74'	48'	22'	1'	1'	1'
	12x12	284'	267'	250'	233'	216'	199'	182'	165'	148'	131'	114'

ISSUED:	STANDARD DETAIL	DETAIL NO.
6/97	RESTRAINED JOINTS	SD-600
REVISED: 05/16		1 OF 3

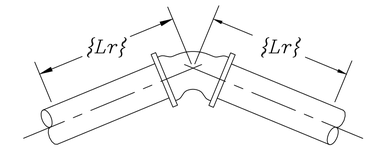

HORIZONTAL BENDS

The minimum restrained length of pipe (Lr) to extend in both directions from the horizontal bend shall be derived from the following table.

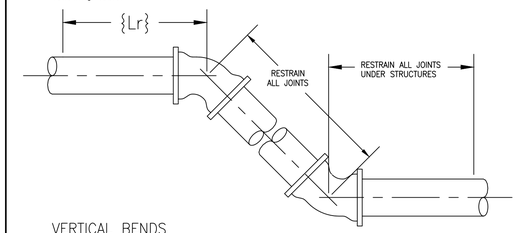

VERTICAL BENDS

The minimum restrained length of pipe (Lr) to be restrained on both sides of the vertical off set shall be derived from the following table.

PIPE SIZE & MATERIAL		HORIZONTAL BENDS				VERTICAL BENDS			
		11 1/4°	22 1/2°	45°	90°	11 1/4°	22 1/2°	45°	90°
PVC PIPE	4"	3'	5'	11'	27'	7'	15'	31'	*
	6"	4'	7'	15'	37'	10'	21'	43'	*
	8"	5'	10'	20'	48'	13'	27'	56'	*
	12"	6'	13'	27'	65'	19'	38'	78'	*
DI POLY WRAP	4"	3'	6'	13'	31'	11'	22'	46'	*
	6"	4'	8'	18'	42'	15'	31'	65'	*
	8"	5'	11'	23'	54'	20'	41'	84'	*
	12"	7'	15'	31'	74'	28'	57'	118'	*

*NOT RECOMMENDED

ISSUED:	STANDARD DETAIL	DETAIL NO.
6/97	RESTRAINED JOINTS	SD-600
REVISED: 05/16		2 OF 3

REDUCER SIZE & PIPE MATERIAL		MINIMUM RESTRAINED LENGTH
PVC PIPE	6x4	53'
	8x4	97'
	8x6	56'
	12x4	164'
	12x6	137'
	12x8	100'
DI POLY WRAP	6x4	81'
	8x4	147'
	8x6	85'
	12x4	247'
	12x6	207'
	12x8	151'

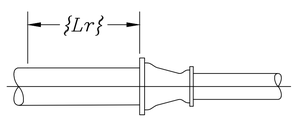

REDUCERS

The minimum length of pipe (Lr) to be restrained on the large side of the reducer shall be derived from the above table

DEAD END SIZE & PIPE MATERIAL		MINIMUM RESTRAINED LENGTH
PVC PIPE	4	74'
	6	104'
	8	135'
	12	189'
DI POLY WRAP	4	112'
	6	157'
	8	204'
	12	284'

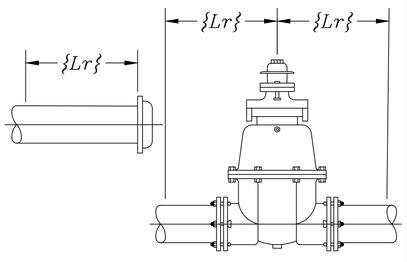

DEAD ENDS & VALVES

The minimum length of pipe (Lr) to be restrained on a dead end shall be derived from the above table.
Concrete thrust blocks may be used with permission of the Engineer. All valves shall be considered dead ends in both directions.

ISSUED:	STANDARD DETAIL	DETAIL NO.
6/97	RESTRAINED JOINT	SD-600
REVISED: 05/16		3 OF 3

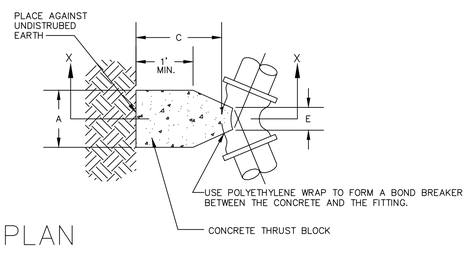

PLAN

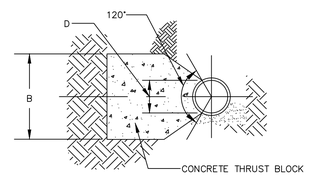

SECTION XX

NOMINAL PIPE SIZE	HORIZONTAL BENDS																			
	11 1/4°					22 1/2°					45°					90°				
	A	B	C	D	E	A	B	C	D	E	A	B	C	D	E	A	B	C	D	E
4"	1.0'	1.0'	1.5'	0.4'	0.4'	1.0'	1.5'	1.5'	0.4'	0.8'	2.0'	1.5'	1.5'	0.4'	0.4'	3.5'	1.5'	1.5'	0.4'	0.4'
6"	1.0'	1.5'	1.5'	0.6'	0.4'	1.5'	1.5'	1.5'	0.6'	0.8'	2.5'	1.5'	1.5'	0.6'	0.4'	5.0'	1.5'	1.5'	0.6'	0.4'
8"	1.0'	2.5'	1.5'	0.7'	0.4'	1.5'	2.5'	1.5'	0.7'	0.8'	3.0'	2.5'	1.5'	0.7'	0.4'	7.5'	1.5'	2.5'	0.7'	0.4'
12"	1.5'	2.5'	1.5'	1.0'	0.6'	3.0'	2.5'	1.5'	1.0'	1.1'	6.0'	2.5'	1.5'	1.0'	0.5'	10.5'	2.5'	2.5'	1.0'	0.5'

ISSUED:	STANDARD DETAIL	DETAIL NO.
6/97	CONCRETE THRUST BLOCKING	SD-610
REVISED: 7/16		1 OF 4

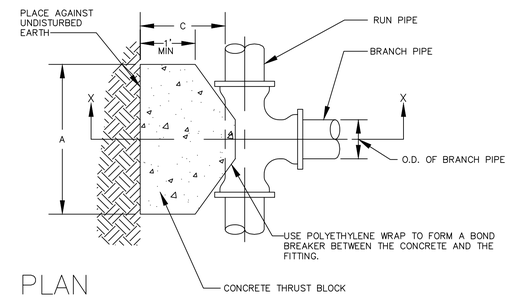

PLAN

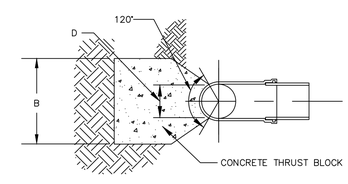

SECTION XX

BRANCH PIPE SIZE*	A	B	C	D
4"	2.5'	1.5'	1.5'	0.4'
6"	3.5'	1.5'	1.5'	0.6'
8"	3.5'	2.5'	1.5'	0.7'
12"	7.5'	2.5'	1.5'	1.0'

*FOR DEAD END FITTINGS USE THRUST BLOCK DIMENSIONS FOR SAME SIZE BRANCH PIPE

ISSUED:	STANDARD DETAIL	DETAIL NO.
6/97	CONCRETE THRUST BLOCKING	SD-610
REVISED: 7/16		2 OF 4

Contact Arizona 811 at least two full working days before you begin excavation
ARIZONA811
Call 811 or click Arizona811.com

Kimley»Horn
© 2022 KIMLEY-HORN AND ASSOCIATES, INC.
333 EAST WETMORE ROAD, SUITE 280
TUCSON, ARIZONA 85705 (520) 615-9191

NO.	BY	DATE	REVISION	APPR.	DATE

Registered Professional Engineer (Civil) CERTIFICATE NO. 38413 RAY MONTOYA Date Signed 08/22/22 ARIZONA, U.S.A.
Expires 12/31/23

CITY OF NOGALES
WATER MAIN REPLACEMENT
ROYAL ROAD

DETAIL SHEET

DESIGNED BY: ROM/GAG	DATE 07/22	SURVEY REQUEST NO.	32 OF 33
DRAWN BY: KMT/DIM	DATE 07/22	SCALE: VERT.: 1"=4' HORIZ.: 1"=40'	PLAN NO.
CHECKED BY: ROM/RPM	DATE 08/22		

Plotted By:Karli.timlin Date:October 13, 2022 File Path:K:\TUC_WaterResources\098036008_City Of Nogales\CADD\Water Plans Royal Road.3.201\3.201Royal Road Wtr DTL 30-32.dwg

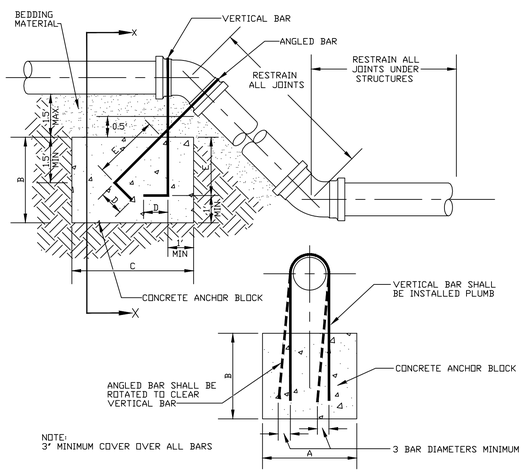

NOTE:
3" MINIMUM COVER OVER ALL BARS

SECTION XX

NOMINAL PIPE SIZE	VERTICAL BENDS																	
	11 1/4°						22 1/2°						45°					
	A	B	C	BAR SIZE	D	E	A	B	C	BAR SIZE	D	E	A	B	C	BAR SIZE	D	E
4"	1.5'	2.0'	2.0'	#4	0.5'	1.0'	2.0'	2.5'	2.0'	#4	0.5'	1.0'	2.0'	2.5'	3.0'	#4	0.5'	1.0'
6"	2.0'	2.0'	3.0'	#4	0.5'	1.0'	2.0'	3.5'	3.0'	#4	0.5'	1.0'	3.0'	4.0'	3.0'	#5	0.7'	1.0'
8"	2.0'	3.0'	3.0'	#4	0.5'	1.2'	2.5'	4.5'	3.0'	#5	0.7'	1.2'	3.0'	5.5'	4.0'	#6	0.8'	1.2'
12"	3.0'	4.0'	3.0'	#5	0.7'	1.4'	3.0'	6.0'	4.0'	#6	0.8'	1.4'	4.0'	6.5'	5.0'	#7	1.0'	1.4'

90° BENDS ARE NOT RECOMMENDED

ISSUED:	STANDARD DETAIL	DETAIL NO.
6/97	CONCRETE THRUST BLOCKING	SD-610
REVISED: 7/16		3 OF 4

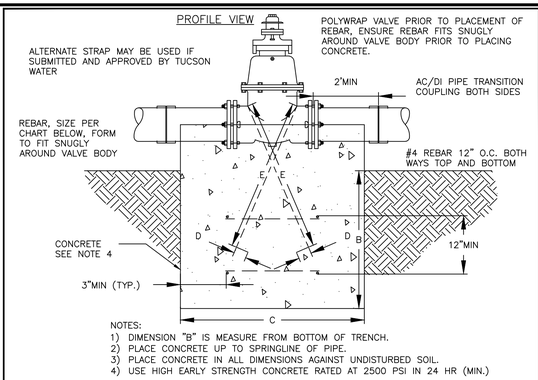

NOTES:
1) DIMENSION "B" IS MEASURE FROM BOTTOM OF TRENCH.
2) PLACE CONCRETE UP TO SPRINGLINE OF PIPE.
3) PLACE CONCRETE IN ALL DIMENSIONS AGAINST UNDISTURBED SOIL.
4) USE HIGH EARLY STRENGTH CONCRETE RATED AT 2500 PSI IN 24 HR (MIN.)

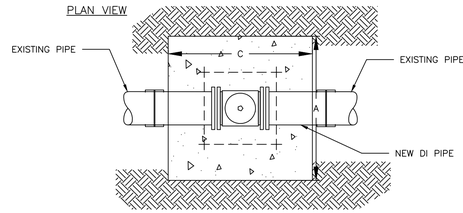

DIMENSIONS

NORMAL PIPE SIZE	BAR SIZE	A	B	C	D	E
4"	#4	2.5'	1.5'	1.5'	0.5'	1.0'
6"	#5	3.5'	2.0'	2.0'	0.7'	1.5'
8"	#6	3.5'	2.5'	2.5'	0.8'	2.0'
12"	#7	5.5'	3.5'	3.5'	1.0'	3.0'

ISSUED:	STANDARD DETAIL	DETAIL NO.
6/97	CONCRETE THRUST BLOCKING	SD-610
REVISED: 11/17		4 OF 4

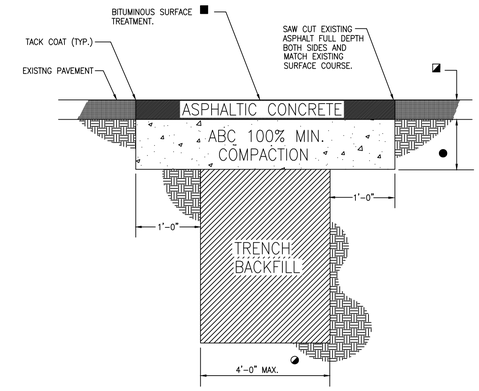

TYPE 1

◪ FOR TRENCH WIDTHS EXCEEDING 4' REFER TO TYPE 2 DETAIL

◪ 2" MINIMUM OR THICKNESS OF EXISTING PAVEMENT WHICHEVER IS GREATER

■ REQUIRED ONLY FOR LONGITUDINAL TRENCHES WITH WIDTHS GREATER THAN 6'

● 4" MINIMUM ABC OR THICKNESS OF EXISTING GRANULAR BASE COURSE MATERIALS (E.G. ABC & SELECT MATERIAL) WHICHEVER IS GREATER

REFER TO NOTES 1–14
SHEET 1 OF 4

ISSUED:	STANDARD DETAIL	DETAIL NO.
6/97	UTILITY TRENCH PAVEMENT PATCH	SD-650
REVISED: 8/00		1 OF 3

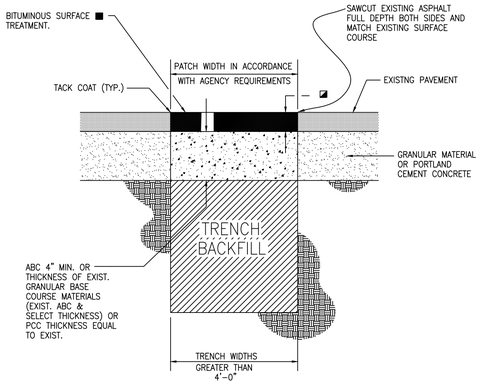

TYPE 2

◪ 2" MINIMUM OR THICKNESS OF EXISTING ASPHALT PAVEMENT WHICHEVER IS GREATER

■ REQUIRED ONLY FOR LONGITUDINAL TRENCHES WITH WIDTHS GREATER THAN 6'

REFER TO NOTES 1–14
SHEET 1 OF 4

ISSUED:	STANDARD DETAIL	DETAIL NO.
6/97	UTILITY TRENCH PAVEMENT PATCH	SD-650
REVISED: 9/17		2 OF 3

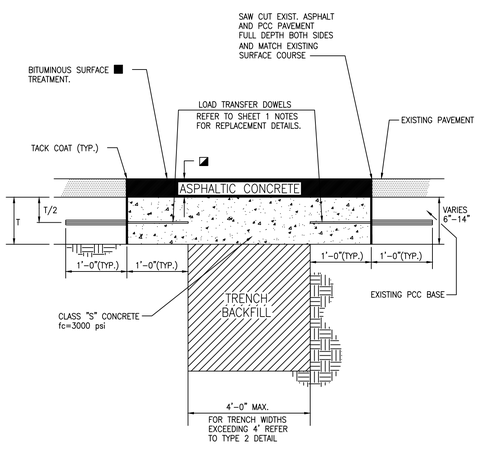

TYPE 3

◪ 2" MINIMUM OR THICKNESS OF EXISTING ASPHALT PAVMENT WHICHEVER IS GREATER

■ REQUIRED ONLY FOR LONGITUDINAL TRENCHES WITH WIDTHS GREATER THAN 6'

REFER TO NOTES 1–14
SHEET 1 OF 4

ISSUED:	STANDARD DETAIL	DETAIL NO.
6/97	UTILITY TRENCH PAVEMENT PATCH	SD-650
REVISED: 8/00		3 OF 3

Contact Arizona 811 at least two full working days before you begin excavation
ARIZONA811
Call 811 or click Arizona811.com

Kimley»Horn
© 2022 KIMLEY-HORN AND ASSOCIATES, INC.
333 EAST WETMORE ROAD, SUITE 280
TUCSON, ARIZONA 85705 (520) 615-9191

NO.	BY	DATE	REVISION	APPR.	DATE

Registered Professional Engineer (Civil)
CERTIFICATE NO. 38413
RAY MONTOYA
Date Signed 08/22/22
ARIZONA, U.S.A.
Expires 12/31/23

CITY OF NOGALES
WATER MAIN REPLACEMENT
ROYAL ROAD

DETAIL SHEET

DESIGNED BY: ROM/GAG	DATE 07/22	SURVEY REQUEST NO.	33 OF 33
DRAWN BY: KMT/DIM	DATE 07/22	SCALE: VERT.: 1"=4' HORIZ.: 1"=40'	PLAN NO.
CHECKED BY: ROM/RPM	DATE 08/22		

Plotted By:Karli.timlin Date:October 13, 2022 File Path:K:\TUC_WaterResources\098036008_City Of Nogales\CADD\Water Plans Royal Road.3.201\3.201Royal Road Wtr DTL 30-32.dwg